DS-K1T642MW
Face Recognition Terminal

- Forced mask wearing alert: If the recognizing face does not wear a mask, the device will prompt a voice reminder. At the same time, the authentication or attendance will be failed
- Face mask wearing alert: If the recognizing face does not wear a mask, the device will prompt a voice reminder. At the same time, the authentication or attendance is valid
- Face recognition distance: 0.3 m to 3 m
- Max. 6,000 face capacity, Max. 10,000 card capacity, and Max. 150,000 event capacity
- Face recognition duration < 0.2 s/User; face recognition accuracy rate ≥ 99%
- Two-way audio with indoor station and main station
- Supports 6 attendance status, including check in, check out, break in, break out, overtime in, overtime out
- Remotely opens door and starts live view via Hik-Connect
- Configuration via the web client
- Supports ISAPI and ISUP5.0 protocol

▪ Specification

Display	
Dimensions	4.3-inch
Type	IPS Full Screen
Operation method	Capacitive touch screen
Video	
FOV	HFOV= 41.5°; VFOV= 75.5°; DFOV=87°
Pixel	2 MP
Lens	× 2
Audio	
Tone quality	Noise suppression and echo cancellation
Network	
Wired network	10 M/100 M/1000 M self-adaptive
Wi-Fi	Support
Communication protocol	ISUP 5.0, ISAPI, NetSDK, HikCentral Pro OpenAPI, and Hik-ProConnect OpenAPI
Interface	
Network interface	1
RS-485	1
Wiegand	1
Lock output	1
Exit button	1
Door contact input	1
Power interface	2-pin
Capacity	
Card capacity	10,000
Face capacity	6,000
Event capacity	150,000
Authentication	
Card type	Mifare 1 card
Card reading frequency	13.56 MHz
Face recognition duration	< 0.2 s
Face recognition distance	0.3 to 3 m
Function	
QR code recognition	Support
Face anti-spoofing	Support
Audio prompt	Support
Time synchronization	Support
General	
Power supply method	12 V/2 A (power adapter not included)
Working temperature	-10 °C to 50 °C (14 °F to 122 °F)
Working humidity	0 to 90% (No condensing)
Dimensions	118 mm × 118 mm × 20 mm (4.6'' × 4.6'' × 0.7'')
Application environment	Indoor
Installation	Surface, optional base stand

Language	English, Spanish (South America), Arabic, Thai, Indonesian, Russian, Vietnamese, Portuguese (Brazil)
Platform	Hik-ProConnect and HikCentral Professional

▪ Available Model

DS-K1T642MW
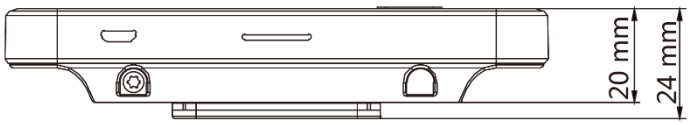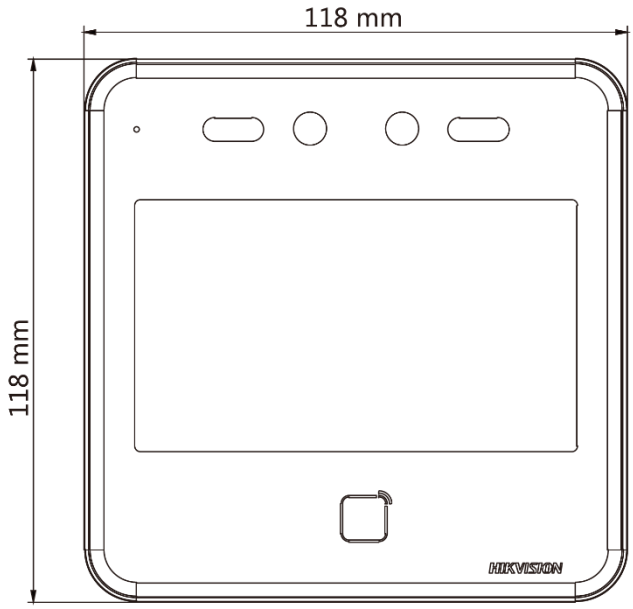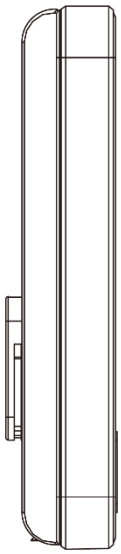
▪ Dimension