DHI-ASI6214D-W

Dahua Single Door Face Recognition,Card Swiping,Password,Fingerprint Face Recognition Access Controller

- 4.3 inch glass touch screen with a resolution of 272 × 480.
- 2-MP wide-angle dual-lens camera with IR illumination and DWDR.
- Multiple unlock methods including face, card, password, QR code and fingerprint. You can configure scheduled unlock methods, or combine them to create your own personal unlock methods.
- Supports 6,000 users, 6,000 faces, 6,000 fingerprints, 10,000 cards, 6,000 passwords, 50 administrators, and 300,000 records.
- Recognizes faces 0.3 to 1.5 m away (0.98–4.92 ft) at an accuracy of 99.9%, and compares 1 face with N faces at the speed of 0.2 sec/person.
- For improved security and to protect against the device being forcefully opened, security module expansion is supported.
- Manages attendance and exports attendance records.
- Features face mask detection and safety helmet detection.
- Supports visitor QR code and doorbell function.
- Video intercom and app control.
- Plays advertisements in video and image format.
- Liveness detection is used to detect spoof attempt, such as using a photo or video to gain access.
- TCP/IP and Wi-Fi connection.
- Supplies power to the electromagnetic lock and card reader, with a maximum output of 12 V and 1 A.

Technical Specification

System

Main Processor	Embedded Processor
Button Type	Touch button
Network Protocol	IPv4;RTSP;UDP;P2P;IPv6;RTP;TCP;SIP
OSDP Protocol	Yes
Interoperability	ONVIF;CGI
SDK and API	Yes

Basic

Product Type	Standalone
Display Screen	4.3-inch display screen
Screen Type	Capacitive Touchscreen
Screen Resolution	272 (H) × 480 (V)
Camera	2-MP CMOS HD dual-lens camera
WDR	DWDR
Light Compensation	Auto IR
Voice Prompt	Yes
Speaker	Yes
Casing Material	PC + ABS

Function

Verification Method	Card;Password;Fingerprint;QR Code;Face Recognition
Door Open Notification Mode	Quick mode;Simple mode;Standard mode;Comparison mode
Period List	128 periods
Holiday Period	128 periods
Network Update	Yes
First User Unlock	Yes
Remote Verification	Yes
Restricted List/Trusted List	Yes
Advertisement Playing	Plays advertisements in video and image format
Peripheral Card Reader	1 × RS-485 card reader 1 × Wiegand card reader
Multi-user Authentication	Yes
Real-time Monitoring	Yes
Multi-factor Authentication	Yes
Capture Function	Yes
Web Configuration	Yes
Auto Registration	Yes

RFID

Card Type	IC card (Mifare card);Desfire card (EV3,Compatible with Dahua card by default)
Modulation Type	ASK
Frequency Range	13.56 MHz
Max. Transmission Power	42 dBuA/m@10 m

DHI-ASI6214D-W

Network

Max. Transmission Power	≤20 dBm@2,400–2,483.5 MHz
Wi-Fi	Yes
Wireless Standard	IEEE802.11b/802.11g/802.11n
Wireless Frequency Range	2.4 GHz

Performance

IC Card Encryption	Yes
Card Reading Distance	0 cm–3 cm (0"–1.18")
Face Recognition Height Range	0.9 m–2.2 m (2.95 ft–7.22 ft)
Face Recognition Distance	0.3 m–2.0 m (0.98 ft–6.56 ft)
Face Recognition Accuracy	99.9%
Face Recognition Time	0.2 s
Fingerprint Sensor Type	Optical fingerprint sensor
Fingerprint Verification Mode	1:N
Fingerprint Comparison Time	1.5 s
Fingerprint Recognition Time	0.5 s

User

User (Card) Type	Normal user; VIP users; patrol users; guest user; blocklist user; other user; custom user 1; custom user 2

Capacity

Face Image Capacity	6,000
User Capacity	6,000
Fingerprint Capacity	6,000
Card Capacity	10,000
Password Capacity	6,000
Record Capacity	300,000

Port

RS-485	1 port that can also be used by the Wiegand card reader.
Wiegand	1 port that can also be used by the RS-485 card reader.
USB	1 × USB2.0 port
Network Port	1 × 10/100 Mbps Ethernet port
Alarm Linkage	Yes
Doorbell	1 channel
Exit Button	1 channel
Door Status Detection	1 channel
Lock Control	1 channel
Power Output Port	1 channel (12 V, 1.0 A)

Alarm

Anti-pass Back	Yes
Tamper Alarm	Yes
Duress Alarm	Yes
Door Sensor Timeout	Yes
Intrusion	Yes
Illegal Card Exceeding Threshold	Yes
Duress Fingerprint	Yes

General

Power Adapter	Included
Power Supply	12 VDC, 2 A
Power Consumption	≤12 W
Product Dimensions	167.4 mm × 84.4 mm × 24.0 mm (6.59" × 3.32" × 0.94") (H × W × D)
Packaging Dimensions	219 mm × 122 mm × 58 mm (8.62" × 4.80" × 2.28") (H × W × D)
Transport Package Dimensions	513 mm × 375 mm × 469 mm (20.20" × 14.76" × 18.46") (H × W × D)
Operating Temperature	–10 °C to +45 °C (+14 °F to +113 °F)
Operating Humidity	0%–90% (RH), non-condensing
Operating Altitude	0 m–1,300 m (0 ft–4265.09 ft)
Operating Environment	Indoor
Gross Weight	0.41 kg (0.90 lb)
Accessory	The bracket is included.
Installation	Wall Mount;Floor Bracket Mount;Desk Bracket Mount
Storage Temperature	–20 °C to +70 °C (–4 °F to +158 °F)
Storage Humidity	30%–75%

Ordering Information

Type	Model	Description
Face Recognition Access Controller	DHI-ASI6214D-W	Dahua Single Door Face Recognition,Card Swiping,Password,Fingerprint Face Recognition Access Controller

Installation

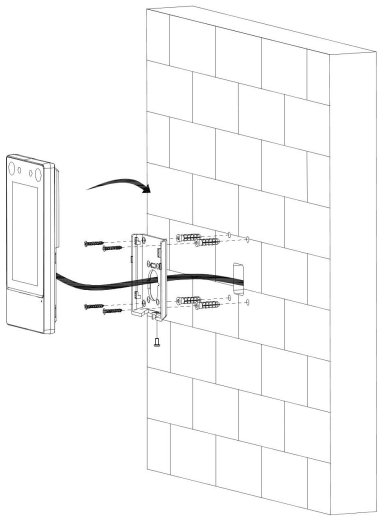

Dimensions (mm[inch])

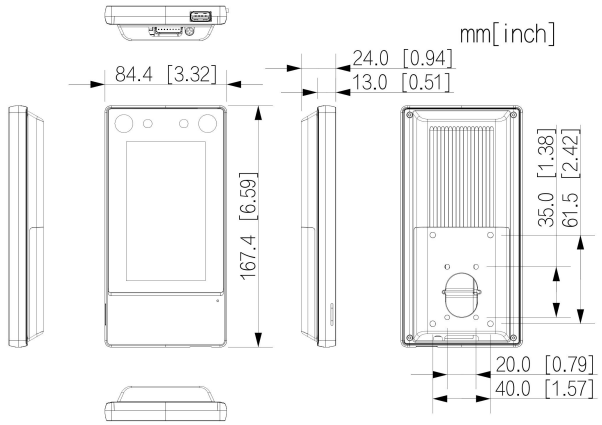

CDG Computer Peripheral and Supplies Ltd.

Computer Peripheral and Supplies Ltd.
244 Soi Phatthanakan 53, Phatthanakan, Suanluang,
Bangkok 10250 Thailand

Tel : (66) 0-2322-9535, 0-2722-4040, Fax : (66) 0-2322-7990
Email : sales.dept@cps.co.th, www.cps.co.th
www.facebook.com/cps.co.th, LINE ID : @cps.co.th

Rev 002.000

© 2025 Dahua. All rights reserved. Design and specificatons are subject to change without notce.
Pictures in the document are for reference only, and the actual product shall prevail.