Element P303HH

Handheld 2D Scanner

*Includes stand only. Cradle not included.

The Element **P303HH** Scanner is a high-speed, handheld image scanner built to deliver rapid and accurate barcode capture across 1D and 2D formats.

Equipped with an expanded view image sensor and precise red light targeting, it supports omnidirectional scanning with exceptional speed and reliability—even on mobile screens and curved surfaces.

With support for multi-language barcode data transmission, the P303HH integrates easily with Apple iOS, Android, Windows PCs, and tablets. Its ergonomic design ensures comfortable use over long shifts, while a high-capacity battery keeps performance consistent in demanding environments.

Designed to withstand drops up to 1.5 meters, the P303HH combines durability with smart features like fast decoding, screen scanning, and motion tolerance, making it an ideal choice for modern retail and logistics operations.

1D/2D Scanner | High Speed Scan | Expanded View | Fast Decoding | Screen Scan | Customisable | Motion Tolerance (2 M/S) | Drop Distance (1.5M)

- Low power consumption, high performance
- Comprehensive reading of all mainstream 1-D, 2-D code
- Quickly read the bar code on the phone screen
- Supports RS232 interface and USB interface
- Stand included

DIMENSIONS

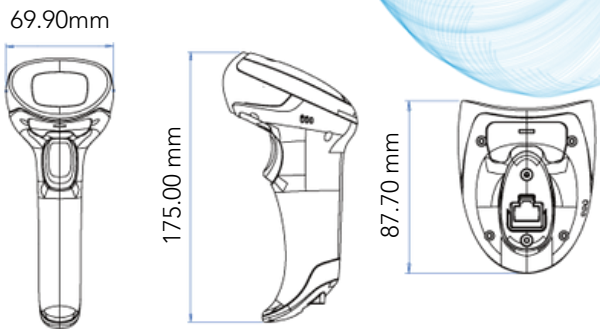

TECHNICAL SPECIFICATIONS - P303HH

Item		Parameter
Physical Characteristics	Dimensions	175mm x 88mm x 70mm
	Weight	126g
	Voltage Current	5 VDC / 300mA (operating)
Performance Characteristics	Image (Pixels)	1280 p(H) x 800 p(V)
	Light Source	Aimer: 617nm LED illumination: 3500K LED
	Field of View	42°(H) x 28°(V)
	Scan Angle	Pitch ±65° Yaw 360° Roll ±60°
	Symbol Contrast	≥25%
	Interfaces Supported	USB, RS232
	Motion Tolerances	≥2m/s
Symbologies	1D	UPC, EAN, Code128, Code 39, Code 93, Code11, Matrix 2 of 5, Interleaved 2 of 5, Codabar, MSI Plessey, GS1 DataBar, China Postal, Korean Postal, etc.
	2D	PDF417, MicroPDF417, Data Matrix, Maxicode, QR Code, MicroQR, Aztec, Hanxin, etc.
User Environment	Operating Temperature	32°F ~ 122°F / 0°C ~ 50°C
	Storage Temperature	-40°F ~ 158°F / -40°C ~ 70°C
	Drop Resistance	Withstand drop 1.5m on concrete
	Humidity	0% ~ 95%, non-condensing
	Ambient Light Immunity	100,000 Lux.
Decode Ranges	Code 39 (3.13 mil)	30mm-125mm
	Code 39 (3.9 mil)	55mm-130mm
	Code 39 (5.13 mil)	35mm-175mm
	Code 39 (20 mil)	55mm-320mm
	UPC-A (13 mil)	35mm-190mm
	PDF (6.88 mil)	20mm-195mm
	DM (10 mil)	25mm-325mm
	QR (20 mil)	10mm-420mm

**Product specifications and data are subject to change without notice (E&OE)*