MITSUBISHI ELECTRIC

Changes for the Better

Automating the World

FACTORY AUTOMATION

INVERTER
FR-A800

Outstanding Performance and Uncompromising Quality
[Slim Models Added to the Lineup]

- Approach to the leading drive performance
- Security & safety
- Easy setup & easy to use
- Eco-friendly factories
- System support

Our Factory Automation business is focused on "Automating the World" to make it a better, more sustainable environment supporting manufacturing and society, celebrating diversity and contributing towards an active and fulfilling role.

SUSTAINABLE DEVELOPMENT GOALS

The Mitsubishi Electric Group is actively solving social issues, such as decarbonization and labor shortages, by providing production sites with energy-saving equipment and solutions that utilize automation systems, thereby helping towards a sustainable society.

Mitsubishi Electric is involved in many areas including the following:

Energy and Electric Systems
A wide range of power and electrical products from generators to large-scale displays.

Electronic Devices
A wide portfolio of cutting-edge semiconductor devices for systems and products.

Home Appliance
Dependable consumer products like air conditioners and home entertainment systems.

Information and Communication Systems
Commercial and consumer-centric equipment, products and systems.

Industrial Automation Systems
Maximizing productivity and efficiency with cutting-edge automation technology.

Features	4	1
Application Example, PLC Function, FR Configurator2	24	2
Connection Example	36	3
Standard Specifications	37	4
Outline Dimension Drawings	47	5
Terminal Connection Diagram, Terminal Specification Explanation	64	6
Operation Panel (FR-DU08(-01)), LCD Operation Panel (FR-LU08(-01))	88	7
Parameter List	93	8
Protective Functions	136	9
Option and Peripheral Devices	140	10
Low-Voltage Switchgear/Cables	177	11
Precaution on Selection and Operation	184	12
Compatible Motors	189	13
Compatibility	213	14
Warranty, Inquiry	218	15

Outstanding Performance and

What is required of inverters in this constantly changing world?

At Mitsubishi Electric, we have pursued the answer to this question through constant innovation and evolution.

Introducing our extensive range of high-value,

next-generation inverters delivering outstanding drive performance in any environment,

and a wealth of functionality covering startup to maintenance.

We utilized the traditional Mitsubishi Electric philosophy to further perfect our inverters.

01 APPROACH TO THE LEADING DRIVE PERFORMANCE

The enhanced Real sensorless vector control and vector control serve the needs of all machinery types.

02 SECURITY & SAFETY

Rapid response is obtained when an unexpected trouble occurs.

03 EASY SETUP & EASY TO USE

Fully equipped with a variety of simple functions and equipment to improve work efficiency.

04 ECO-FRIENDLY FACTORIES

Save energy while increasing factory production.

05 SYSTEM SUPPORT

Numerous functions and the extensive lineup of models are ready to support various systems.

A800

Uncompromising Quality

APPROACH TO THE LEADING DRIVE PERFORMANCE

The new series is equipped with the new state-of-the-art high-speed processor developed by Mitsubishi Electric. With better control performance and response level, safe and accurate operation is assured in a diverse range of applications.

Swift, Smooth, yet Robust

The enhanced Real sensorless vector control and vector control serve the needs of all machinery types.

The vector control is available when a vector control compatible option is installed.

(1) For high-quality products

High response

Response speed Real sensorless vector control **50 Hz**[*1] A700: 20 Hz
Vector control **130 Hz**[*2] A700: 50 Hz

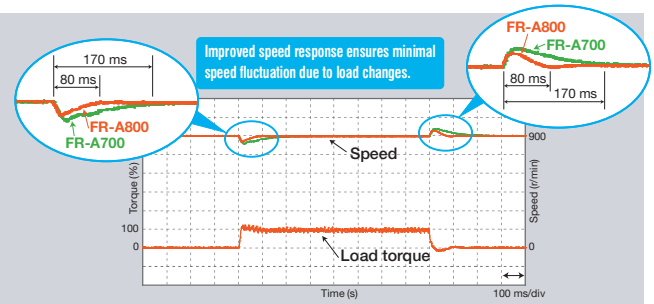

[Example of changes in actual rotation speed with impact load]
(With Real sensorless vector control, SF-PR 4P motor (3.7 kW))

Fast response terminal
The response delay time is reduced.
•Terminal response
A700: 5 to 20 ms → A800: 2 to 3 ms

Line control

Line control is necessary for the machining of elongated products such as paper, thread, wires, all kinds of sheet, and tape. This will respond rapidly to changes in line speed and suppress the occurrences of winding unevenness. This contributes to a steady supply of high-quality products.

*1 : At 3.7 kW with no load. Differs depending on the load conditions and motor capacity.
*2 : The option (FR-A8AP, FR-A8AL, or FR-A8TP) is required.
Speed response: The speed response indicates how fast the inverter follows the change in the speed command. (The larger value indicates the better speed trackability.)

(2) Perform ultra-fine processing

High-speed rotation

Operating frequency Real sensorless vector control and vector control **400 Hz** A700: 120 Hz
V/F control **590 Hz**[*3] A700: 400 Hz

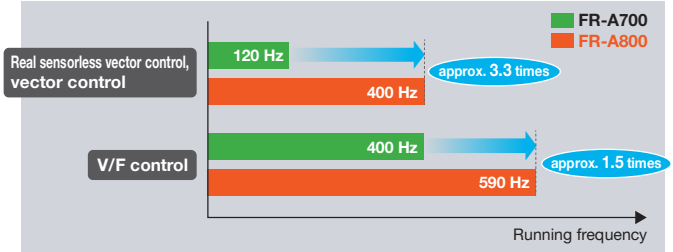

Machine tool

Cutting-edge machine tools are harder and thinner than ever before to be applicable to diverse new materials.
High-speed rotation is required more than ever before in order to be applicable for fine and precise cutting on hard and difficult-to-grind materials.

*3: According to the review result of the export control order about frequency changers, the upper limit of output frequency was determined to be 590 Hz for standard models.

(3) Swiftly move heavy weights

High torque at low speed

Starting torque (When at 0.3 Hz)
Real sensorless vector control **200%** (ND rating)[*4],
Vector control **200%** (ND rating)[*4]
(150% of initial setting for 5.5K and higher)

Zero-speed torque
Vector control **200%**. (Select HD rating.)[*4]

Speed control range
V/F control **1:10** (6 to 60 Hz: Driving)
Advanced magnetic flux vector control **1:120** (0.5 to 60 Hz: Driving)
Real sensorless vector control **1:200** (0.3 to 60 Hz: Driving)
Vector control **1:1500** (1 to 1500 r/min: Both driving/regeneration)

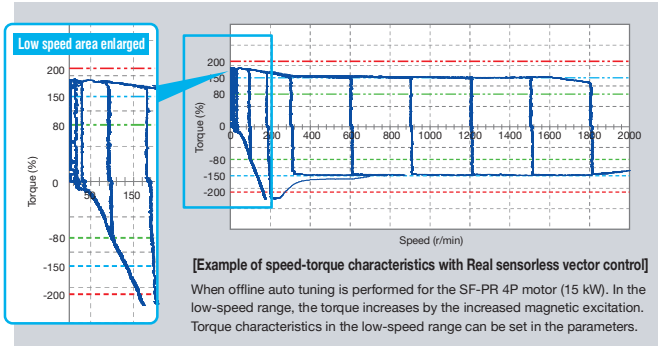

[Example of speed-torque characteristics with Real sensorless vector control]
When offline auto tuning is performed for the SF-PR 4P motor (15 kW). In the low-speed range, the torque increases by the increased magnetic excitation. Torque characteristics in the low-speed range can be set in the parameters.

Cranes

Cranes are in operation daily at ports carrying fully-laden containers in response to strong demand from all over the world. Our new inverter realizes smooth cargo handling work at low speed and high torque for the slow and stable movements required for heavy objects.

*4: Refer to page 17 for the multiple rating setting.

(4) For accurate and stable transport between machines

PM sensorless vector control

• What is a permanent magnet (PM) motor?

A PM motor is a synchronous motor with strong permanent magnets embedded in its rotor. The two major PM motor types are: the interior permanent magnet (IPM) motor with its magnets embedded inside the rotor, and the surface permanent magnet (SPM) motor with its permanent magnets attached on the rotor surface.

• What is PM sensorless vector control?

The speed and magnetic pole positions, the two essential bits of information to control a PM motor, are detected without a sensor (encoder). The speed detection internally-performed in an inverter enables highly accurate control of a PM motor, almost as accurate as an AC servo system, without the need of a sensor (encoder)*5.

When using the Mitsubishi Electric PM motor EM-A series, high-level controls such as **"positioning control"** *6 and **"torque generation at zero speed"** are enabled without using an encoder.

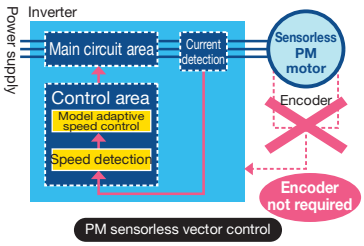

• Easy maintenance for sensor (encoder)-less motor

- No additional cables means less wiring space required.
- Improved reliability is obtained in unfavorable operating environments. (e.g. high vibration)
- PM motors are usually smaller and lighter than induction motors.

Transfer of circuit boards

The Simple positioning control delivers a precision workpiece, such as a printed substrate, to a precise position.
Transfer of fragile glass substrates can be performed with a highly accurate driving system.

*5: Speed fluctuation ratio: ±0.05% (digital input)

$$\text{Speed fluctuation ratio} = \frac{\text{Speed under no load} - \text{Speed under rated load}}{\text{Rated speed}} \times 100(\%)$$

*6: Positional accuracy (with no load) of 1.5K and lower: ±1.8°, 2K and higher: ±3.6°

(5) Taking motor performance to the max

Induction motors and magnet motors can be combined freely

• The cutting-edge auto tuning function

The PM motor auto tuning function, which has been newly developed, enables sensorless operation of other manufacturers' permanent magnet (PM) motors.
Operation with all Mitsubishi Electric induction motors and PM motors, in addition to induction motors and PM motors from other manufacturers*7, is possible. That means you need less motors for spare and stocks.

(For PM motors other than EM-A and other manufacturers' PM motors, the starting torque is limited to 50%, and simple positioning control and zero speed torque generation cannot be used even with tuning.)

*7: Tuning may not be available depending on its motor characteristics.

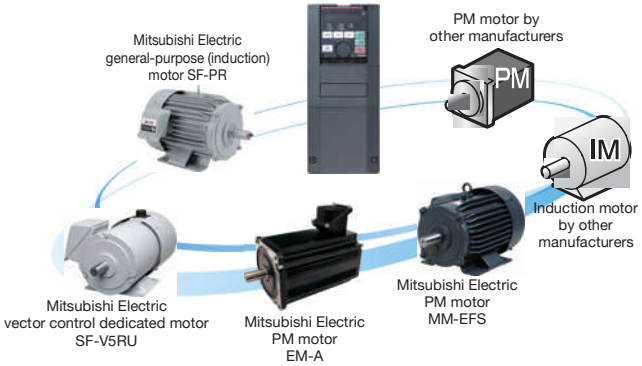

• Low speed, high torque realized with SF-PR motor

By combining with Mitsubishi Electric's high-performance, energy-saving motor SF-PR, 100% continuous operation is possible from a low speed of 0.3 Hz for inverters of any capacity.

(when using Real sensorless vector control)

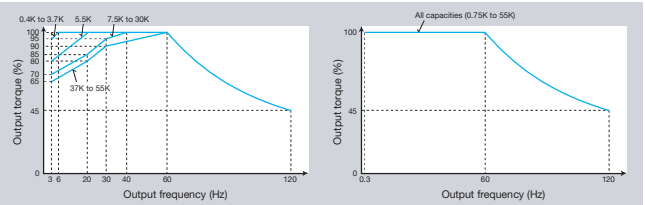

SF-JR continuous operation torque characteristics (Motor input voltage: 200 V)

SF-PR continuous operation torque characteristics (Motor input voltage: 200 V)

• Sharing the spare inverter

One spare inverter is enough for the two types of motors (IM and PM).

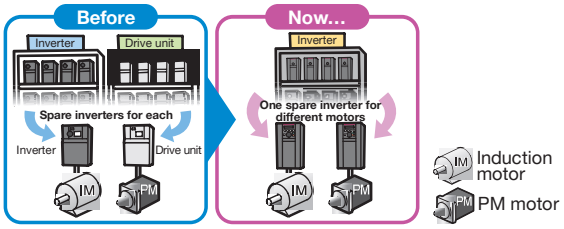

SECURITY & SAFETY

Swift recovery ensured by preventing trouble beforehand.
The FR-A800 has been developed with reliability and safety foremost in mind.

For Improved Equipment Reliability

Rapid response is obtained when an unexpected trouble occurs.

(1) Improved system safety

Safety standards compliance NEW

Controls with safety functions can be easily performed.
The Safe Torque Off (STO) safety function is supported by the inverter. The inverter with the safety function can comply with the safety standards without incurring much expenses.

- PLe and SIL3 are supported as standard.
  - ISO13849-1:2015 Category 3/PLe
  - IEC62061:2021 / IEC61800-5-2:2016 / IEC61508:2010 SIL3

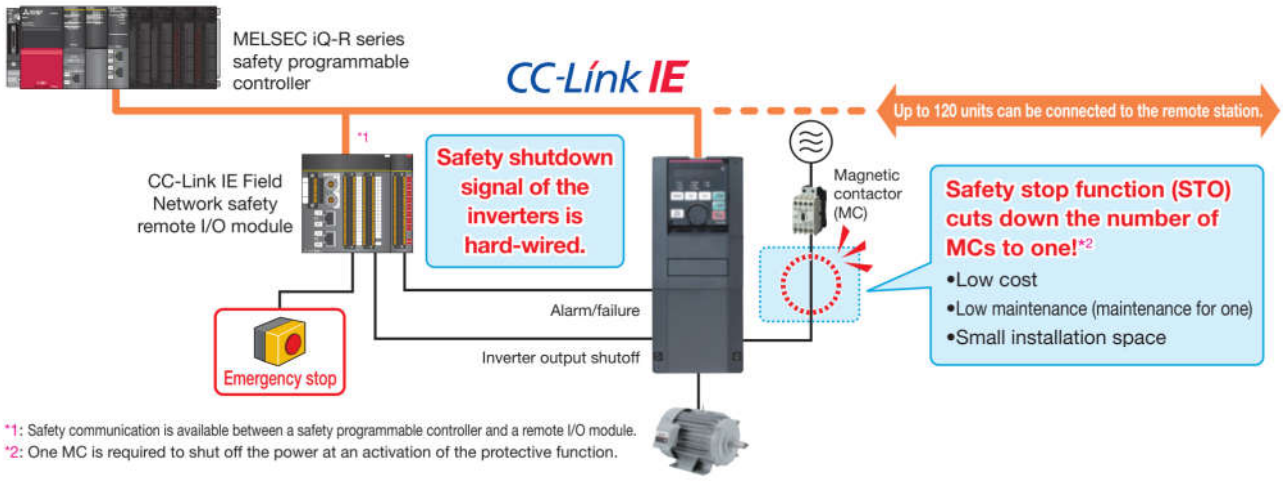

*1: Safety communication is available between a safety programmable controller and a remote I/O module.
*2: One MC is required to shut off the power at an activation of the protective function.

(2) Reliable and secure maintenance

Standard 24 VDC power supply for the control circuit NEW

In addition to the existing power supply input terminals (R1 and S1) of the control circuit, 24 VDC input is equipped as standard. The 24 VDC power supplied from outside can be fed to the control circuit locally, enabling the parameter settings, communication operation and safety maintenance without turning ON the main power.

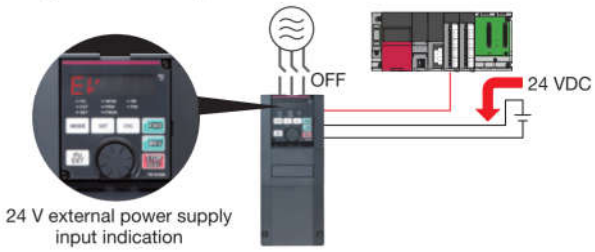

Prevention of trouble with temperature monitoring NEW

The inverter is equipped with an internal temperature sensor, which outputs a signal when the ambient temperature is high.
This facilitates the detection of rises in temperature inside the inverter following cooling fan malfunction, or rises in ambient temperature due to inverter operating conditions.

(3) Long life components and life check function

Long life components

- The service life of the cooling fans is now 10 years*3.
  The service life can be further extended by ON/OFF control of the cooling fan.
- Capacitors with a design life of 10 years*3*4 are adapted.
  With these capacitors, the service of the inverter is further extended.
- Estimated service lifespan of the long-life parts

Components	Estimated lifespan of the FR-A800	Guideline of JEMA
Cooling fan	10 years	2 to 3 years
Main circuit smoothing capacitor	10 years*4	5 years
Printed board smoothing capacitor	10 years*4	5 years

*3: Surrounding air temperature: Annual average of 40°C (free from corrosive gas, flammable gas, oil mist, dust and dirt).
The design life is a calculated value from the LD rating and is not a guaranteed product life.
*4: Output current: 80% of the inverter LD rating
*5: Excerpts from "Periodic check of the transistorized inverter" of JEMA (Japan Electrical Manufacturer's Association).

Enhanced life diagnosis function

- An internal thermal sensor is equipped to all inverters as standard, which enables monitoring of the installation environment.
  Use this function as a guide for the life diagnosis. NEW
- Maintenance timers are available for up to three peripheral devices, such as motor and bearing.

"Maintenance 1 output" warning

(4) Quick reaction to troubles

Easy fault diagnosis NEW

- The operating status (output frequency, etc.) immediately before the protection function activates can be stored in the inverter built-in RAM with the trace function. The stored data (trace data) can be copied to a USB memory device or directly imported to a computer, facilitating trouble analysis using the inverter setup software (FR Configurator2).

Trace data stored in the built-in RAM is deleted when the power is turned OFF or the inverter is reset.

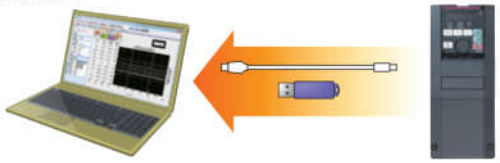

- Clock setting is now available in addition to the already-available cumulative energization time. The time and date at a protective function activation are easily identified. (The clock is reset at power-OFF.) The date and time are also saved with the trace data, making the fault analysis easier. By using the real-time clock function with the optional liquid crystal display (LCD) operation panel (FR-LU08) (when using battery), the time is not reset even when the power supply is turned OFF.

Backup/restore NEW

- The GOT can be used for backing up inverter's parameter settings and the data used in the PLC function of inverter, and the backup stored in the GOT can be used to restore the data in the inverter.

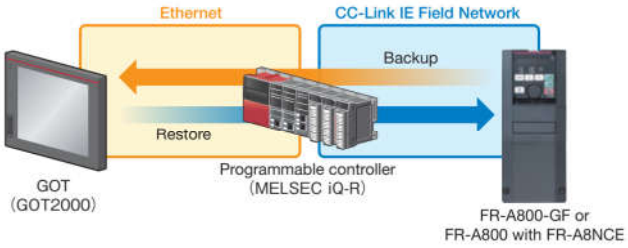

(5) Renewal assurance

Intercompatibility with existing models

- The inverter installation method is the same as that for the FR-A700 series, eliminating any concerns over replacement.

  Furthermore, FR-A700 series control circuit terminal blocks can be installed with the use of an option (FR-A8TAT).

- The terminal response adjustment function allows a user to adjust the response speed in accordance with the existing facility. NEW
- The conversion function of Inverter Setup Software (FR Configurator2) enables parameter copy from an FR-A700 and even from an FR-A500.

For the compatibilities and differences with the FR-A700 series, refer to page 245.

(6) Reasons for high quality

Design considering the hazardous environment

3D-vibration analysis is performed to confirm the vibration resistance. The analysis is also useful to find the best layout position and to further improve the product's rigidity.

Assuming a hazardous service condition, the product reliability is thoroughly assessed in the design stage. Every effort is made to ensure the best quality of the Mitsubishi Electric inverter.*6

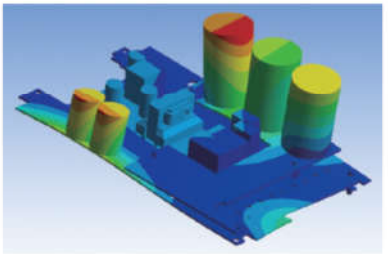

3D-vibration analysis

Heat control for high quality

Resistance against heat is what makes an inverter reliable. A well-designed heat-resistant power module is essential in a reliable inverter. From the power module's design stage, its heat resistance is carefully considered.*6

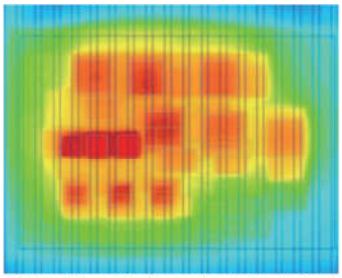

Hydraulic analysis and heat simulation

*6: The usage beyond the product's specified service condition is not guaranteed.

EASY SETUP & EASY TO USE

A range of equipment and functions are prepared allowing work to be performed anywhere to suit product life cycles.

From Startup to Maintenance

Fully equipped with a variety of simple functions and equipment to improve work efficiency.

(1) Streamlining the startup process

Parameter copying with USB memory NEW

- A USB host connecter (A type), which allows external device connections, has been added.
  Parameters can be copied to commercial USB memory devices.
  (Refer to page 69)

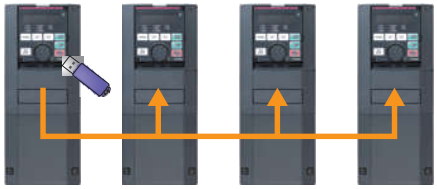

USB 1.1 supported

Easy setup with the Inverter Setup Software (FR Configurator2)

- It is a software which is easy to use and has unity as Mitsubishi Electric FA products with MELSOFT common design and good operability.
- Easy plug-and-play connection to USB terminal equipped as standard

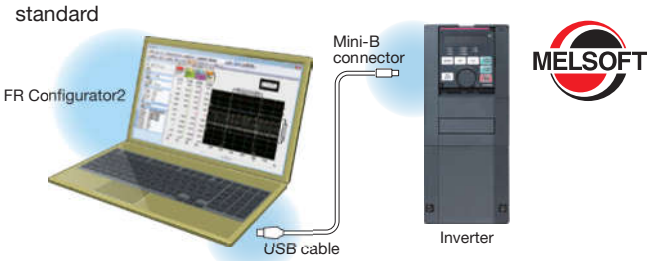

- Free trial version, which contains start-up functions, is available. It can be downloaded at Mitsubishi Electric FA Global Website.

For FR Configurator2, please refer to page 34.

Easy wiring to the control circuit NEW

Spring clamp terminals have been adopted for control circuit terminals. Wires can be protected against loosening under vibrations during transportation of the inverter. Ten additional terminals are used as compared to the FR-A700 series. Round crimping terminals can also be used by employing a control terminal option (FR-A8TR).

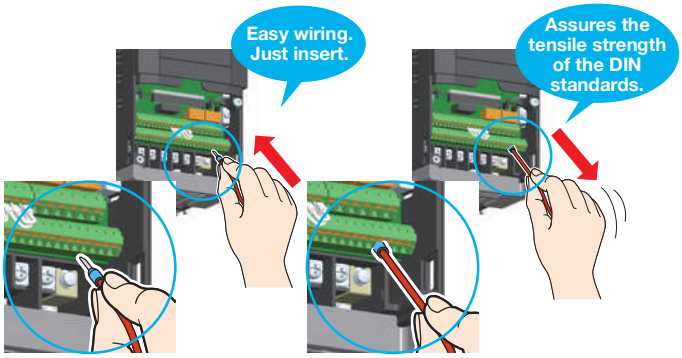

(2) Easy-to-follow display improves the operability

Easy operation with GOT NEW

- Automatic communication is possible without specifying any parameter settings simply by connecting to the GOT2000 series.
- The PLC function device monitor can be displayed at the GOT2000 series.
  Batch control of multiple inverter device monitors is possible with a single GOT unit.
- The sample screen data for the A800 can be found in the screen design software of the GOT2000 series. The newest version of the screen design software can be downloaded from the Mitsubishi Electric FA Global Website.

Easy-to-follow parameter configuration NEW

One of the selectable mode by the operation panel is the Group parameter mode, which provides intuitive and simple parameter settings. (The conventional parameter setting mode is selected by default.)

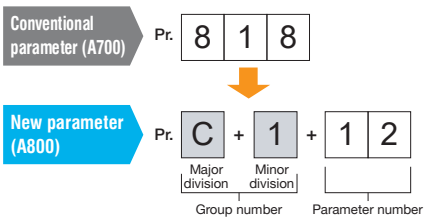

Major division	Name
E	Environment
F	Acceleration/deceleration
D	Start and frequency commands
H	Protective function
M	Monitor
T	Multi function I/O terminal
C	Motor constant
A	Applications
B	Applications (position control)
N	Communication
G	Control

Easy-to-read operation panel NEW

A 5-digit, 12-segment display has been adopted for the operation panel (FR-DU08) for a more natural character display. Furthermore, an optional LCD operation panel (FR-LU08) adopting an LCD panel capable of displaying text and menus is also available.

FR-DU08 (12-segment type)

FR-LU08 (LCD type) (option)

(3) To aid with maintenance

Reduced wiring check time

Split-type covers are adapted for all capacity models.
Maintenance is now easy because all an operator has to do is to remove the cover for the target wiring area.

Maintenance and control of multiple inverters (Option) NEW

Serial number reading is possible using the optional LCD operation panel (FR-LU08) or the Inverter Setup Software (FR Configurator2). Administration of different inverters has become much more simple.

ECO-FRIENDLY FACTORIES

The power consumption by motors is said to amount about the half of all power consumption made by the Japanese manufacturing industry. Factories can save more energy without dropping their production. Less energy and more production—the FR-A800 series will help you to get the both.

The Next Step — Go Green

Save energy while increasing factory production.

(1) Energy-saving function tailored to system, application

Variety of functions

- **Check the energy saving effect at a glance**
  - You can check the energy saving effect on the energy saving monitor.
  - The measured output power amount can be output in pulses.
- **Reduce power consumption during standby**
  - Control circuits other than those for power-related parts can be operated with 24 VDC power supplied from an external power source. NEW
    Since the control circuit can use the external 24 VDC, other power control circuits can stay OFF while no driving is required, and that saves the standby energy.
  - By turning the cooling fan ON/OFF based on the inverter status, wasteful power consumption during stoppages can be reduced.
- **Save energy with Optimum excitation control** NEW
  The excitation current is constantly adjusted to drive the motor in the most efficient method which leads to energy saving.
  For example, with optimum excitation control with motor load torque of 10% when using the SF-JR, motor efficiency has increased by approximately 15% over the previous V/F control method.
- **Effective use of regenerative energy** (option)
  Multiple inverters can be connected to the multifunction regeneration converter (FR-XC) or the high power factor converter option (with inverter/converter switching function) through a common PN bus. Regenerative power is used at other inverters, and surplus energy is returned to the power supply, resulting in energy saving.
  The 315K or higher models (or 250K or higher slim models) are inverter-converter separated types, which are suitable for power regeneration. NEW

(2) PM motor contributes to the energy saving in factories

PM motor

If the inverter is being used for an application requiring constant-torque, such as a conveyor, factory energy savings can be achieved by replacing your current induction motors with permanent magnet motors (PM motors).
(PM motors other than EM-A and other manufacturers' PM motors require tuning.)

- **Why is a PM motor so efficient?**
  - The current does not flow to the rotor (secondary side), so there is no secondary copper loss.
  - Magnetic flux is generated by permanent magnets, so less current is required to drive a motor.

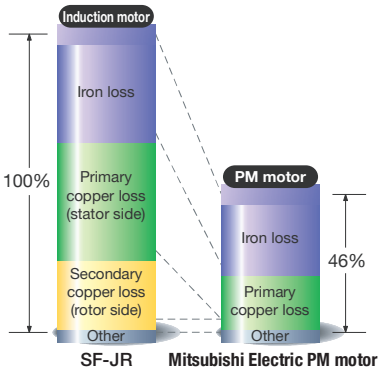

[Comparison of motor losses]
(Example of 1.5 kW motors)

Conveyor

A conveyor transports different goods and products according to its application. A PM motor can keep the carrying speed constant while saving energy.

SYSTEM SUPPORT (NETWORK)

Further Visualization of Information

A seamless data interface is offered.

(1) Ethernet communication function integrated

Inverter with communication function NEW

FR-A800-GN CC-Link IE TSN

With the CC-Link IE TSN (Time Sensitive Networking) communication function, data can be transmitted to IT systems while performing real-time cyclic communication control. This will contribute to startup time reduction and maintainability improvement.

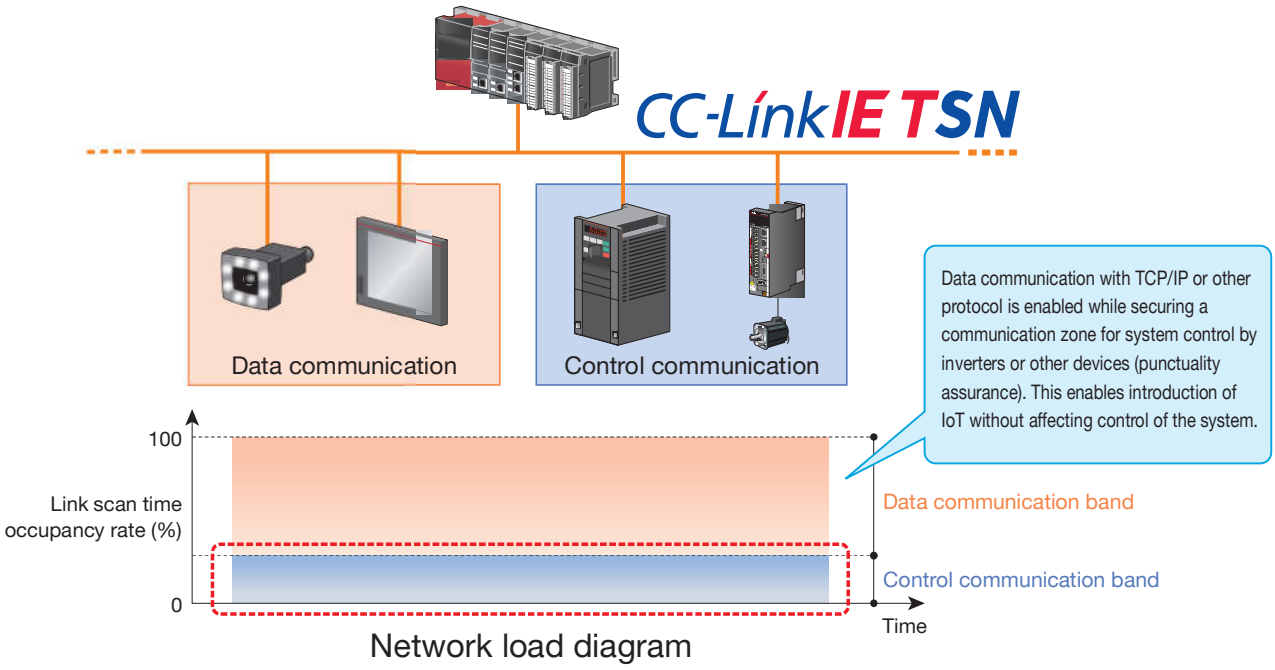

Startup time reduction

Station numbers are easily set with rotary switches.

Automatic detection of the network configuration by the engineering software (GX Works3) reduces the startup time.

Problems at startup such as line faults can be discovered at a glance with the diagnostic function.

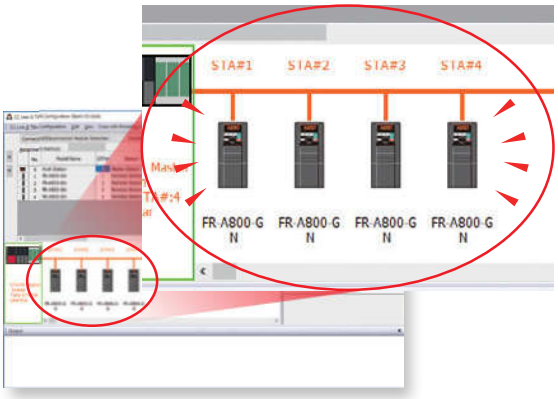

Example of GX Works3 screen

Improved maintainability

Time synchronization allows for real-time monitoring.

This enables trouble analysis to be performed right after an error has occurred.

FR Configurator2 can be connected via Ethernet, which makes maintenance work easier.

FR-A800-GF CC-Link IE Field

The inverter has the CC-Link IE Field Network communication function, which enables immediate operation via the CC-Link IE Field Network.

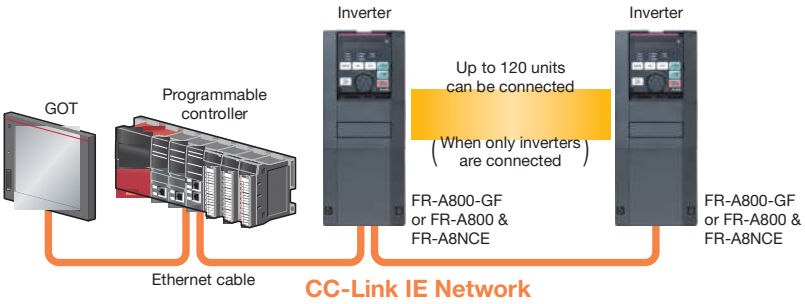

FR-A800-E CC-Link IE Field Basic

The CC-Link IE Field Network Basic is supported, so the network can be created easily. The inverter's status can be monitored and the parameters can be set via Internet. (MODBUS/TCP is also supported.)

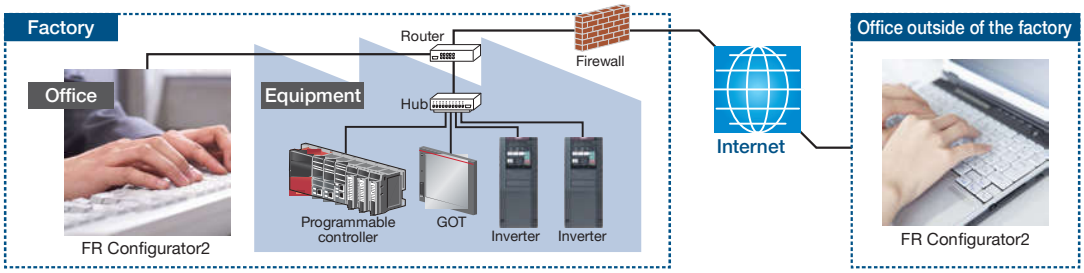

Communication specifications

Item		CC-Link IE TSN	CC-Link IE Field	CC-Link IE Field Basic	CC-Link
Compatible inverter		FR-A800-GN, FR-A800 & FR-A8NCG	FR-A800-GF, FR-A800 & FR-A8NCE	FR-A800-E	FR-A800 & FR-A8NC
Communication speed		1 Gbps / 100 Mbps	1 Gbps	100 Mbps	10 Mbps
Cable		Ethernet category 5e or higher	Ethernet category 5e or higher	Ethernet category 5 or higher	Dedicated cable
Number of connectable inverters		121 (sum of master and slave stations)	64	64 (open specification)*1	42 (maximum)
Cyclic communication		Compatible	Compatible	Compatible	Compatible
Number of links*2	RX	64	64	64	64
	RY	64	64	64	64
	RWr	128 (256 bytes)	128 (256 bytes)	32 (64 bytes)	32 (64 bytes)
	RWw	128 (256 bytes)	128 (256 bytes)	32 (64 bytes)	32 (64 bytes)
Combination with TCP/IP		Supported	Not supported	Supported	Not supported
Topology		Line, star, ring, line-star	Line, star, ring, line-star	Star	Bus

*1: The actual number of connectable inverters differs according to the setting of the master.
*2: The numbers of inverter's remote I/O devices and the addresses of inverter's remote registers are common between CC-Link and CC-Link IE Field Network Basic.

(2) Other network communication

Communication option

- CC-Link, SSCNET III (/H), DeviceNet™, PROFIBUS-DPV0 are supported using a compatible communication option. Other Ethernet-based communication such as the CC-Link IE Field Network communication and the FL remote communication can be also supported.
- A function block (FB) programming for CC-Link communication is available for the MELSEC-Q/L series to create the inverter control sequence programs easily. (The FB library (collection of FB elements) can be downloaded from the Mitsubishi Electric FA Global Website.)
- The standard model with an RS-485 interface (Mitsubishi inverter protocol, MODBUS® RTU protocol) enables communication with other devices without using a communication option.

SYSTEM SUPPORT (ENVIRONMENT ADAPTABILITY)

Installation Anywhere

Compliant with a variety of standards, our extensive range of the FR-A800 series inverter covers various applications.

(1) Comprehensive noise countermeasures

Compliance with EU EMC Directive with inverter alone

Troublesome acquisition of standards is unnecessary.

- The FR-A800 series is equipped with an EMC filter as standard for compliance with EMC Directive with the inverter alone. (EN 61800-3 2nd Environment Category C3)
- The newly developed drive technology and the power supply technology minimize the EMI emitted from inverters.

	Capacitive filter (radio noise filter)	Input-side common mode choke (line noise filter)	DC reactor
55K or lower	Standard (built-in)	Standard (built-in)	Option (sold separately)
75K or higher	Standard (built-in)	Option (sold separately)	Option (sold separately)

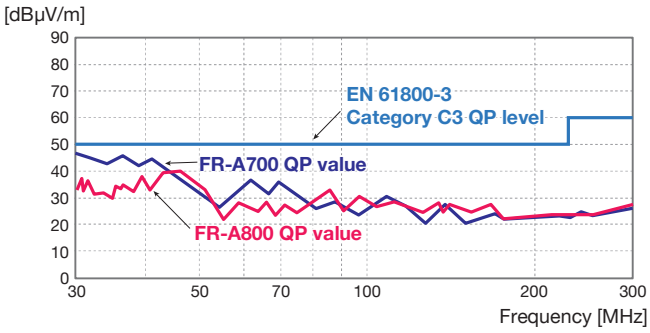

(2) Global compatibility

Compliance with a variety of standards

- Complies with UL, cUL, and EC Directives (CE marking), and the Radio Waves Act (South Korea) (KC marking). It is also certified as compliant with the Eurasian Conformity (EAC).
- The inverters are compliant with the EU RoHS Directive (Restriction of the Use of Certain Hazardous Substances in Electrical and Electronic Equipment), friendly to people and to the environment.
- For the 400 V class*1, compliance with various countries ship classifications allows use on ship equipment. (A noise filter or a ferrite core is required. (Refer to page 210.))

Certification body	
NK	(Nippon Kaiji Kyokai)
ABS	(American Bureau of Shipping)
BV	(Bureau Veritas)
LR	(Lloyd's Register of Shipping)
DNV GL	(DNV GL AS)
CCS	(China Classification Society)
KR	(Korean Register of Shipping)

*1: The IP55 compatible model with a built-in C3 filter is not compliant with the ship classification standards.

For details of the models compliant with global standards, contact your local sales office.

(3) Protected in hazardous environment

Circuit board coating

The inverters with PCB coating (IEC60721-3-3:1994 3C2/3S2) and conductive plating are available for improved environmental resistance. ("-60" or "-06" is affixed to the end of the inverter model name.)

(4) Wire saving, space saving

Built-in brake transistor NEW

In addition to the 22K and lower, 400 V class 30 to 55K models have also been equipped with a built-in brake transistor. (For the slim model inverters FR-A840M-03630(160K) and 04540(200K) and FR-A842M-05080(250K) to 06440(315K), the built-in brake transistor models can be selected.) In an application where the motor is hardly decelerated, connecting a brake resistor can shorten the deceleration time; no brake unit or power regeneration converter is required. Wiring, space, and ultimately the cost will be all saved.

(5) Direct installation by the machine

IP55 compatible NEW

- Inverters can be installed nearby the machine, minimizing cable length between the inverter and motor.
- Support is available for use even in high-humidity or dusty environments, facilitating a more flexible choice of installation locations.
- By enclosing a DC reactor, it requires less wiring and less space.
- Compatible with cable glands to meet the IP55 specification at the wiring section.

IP 5 5

- **First digit** (protection rating against solid objects)

IP rating	Description
Class 5	Protection against dust. No ingress of dust that may inhibit normal operation.

- **Second digit** (protection rating against water)

IP rating	Description
Class 5	Protection against water jets from all directions.

SYSTEM SUPPORT (LARGE-CAPACITY PRODUCTS)

Compatibility with Large-Capacity Motors

Installation space and costs can be reduced for large-capacity systems.

(1) Flexible configuration to meet the needs

Separate inverter and converter modules NEW

The inverter module and the converter module are physically separated for the 315K or higher capacity models.
Inverter module : FR-A842
Converter module : FR-CC2
This facilitates flexible support for a variety of systems such as common bus line (to be supported soon) and parallel operation. The fuse in the FR-A842 inverter eliminates the need of a fuse between terminals P/+ and N/-. These features allow the installation space to be minimized and costs to be reduced. The converter unit can be run with 12-phase rectifier power supply. Motors up to 1350 kW (LD rating) can be driven by the inverters with parallel operation function (FR-A842-P) and the converter units (FR-CC2-P).

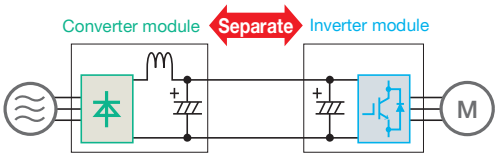

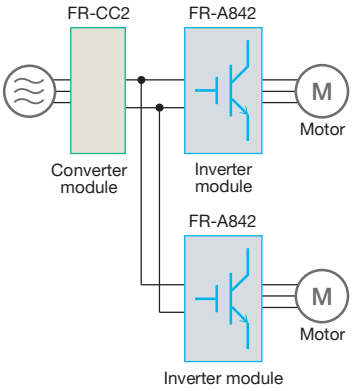

Common bus

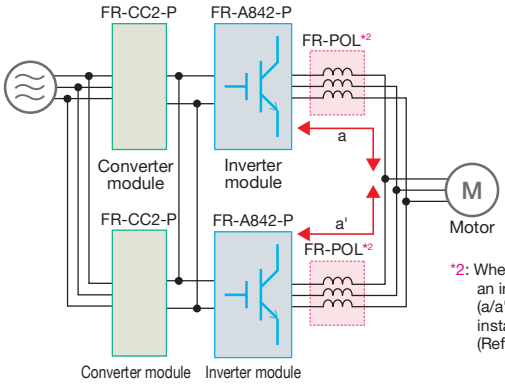

*2: When the cable length from an inverter to the node point (a/a') is less than 10 m, install the FR-POL. (Refer to page 193.)

Parallel operation

Some functions from the standard inverter are limited or not available. (Refer to page 248.)

(2) Turn spare inverters into converters

Changeover between inverter and high power factor converter NEW

Install the FR-A8AVP (option) in a separated converter type inverter to use it as a high power factor converter. To use the converter, the following options are needed: phase detection transformer box, dedicated filter reactor, dedicated reactor for PWM control, dedicated filter capacitor, inrush current limit resistor, etc.
They can be switched to a converter and back to an inverter again to match process requirements.
The converter is classified as the self-excitation three-phase bridge circuit, and achieves K5 (the conversion factor) = 0. The total harmonic distortion of the input current (THDi) is 5% or less*1, which facilitates compliance with the overseas standards related to harmonic suppression.

*1: When the input voltage is distorted, harmonic contents increase because power harmonics flow into the converter.

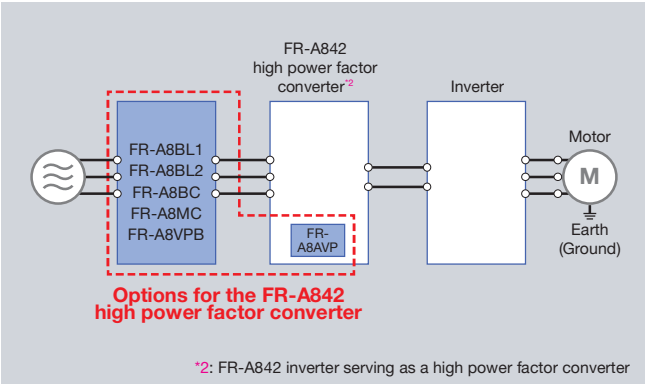

*2: FR-A842 inverter serving as a high power factor converter

(3) Lower enclosure costs

Slim structure (400 V class only) NEW

Improved storage efficiency makes the enclosure downsized, which contributes to cost reduction.
Side by side installation and bus bar connection between terminals P/+ and N/- can reduce the distance between units to 20 mm for the separated converter type.
A DC reactor and an EMC filter*1 are built in the inverter. The built-in brake transistor model*2 is also available.
The wiring work of peripheral devices can be reduced and less space is required.

*1: The inverter with a built-in Class C3 or C2 filter can be selected. Only Class C3 is available for the separated converter type as a built-in filter of the converter unit.
*2: For the separated converter type, the built-in brake transistor model can be selected for the FR-A842M-06440(315K) or lower.

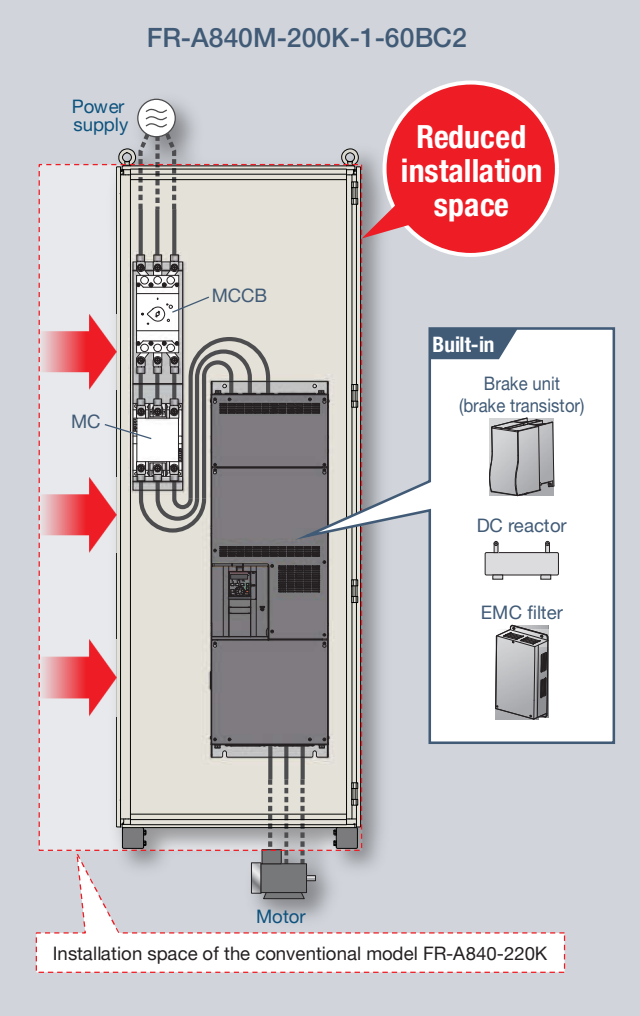

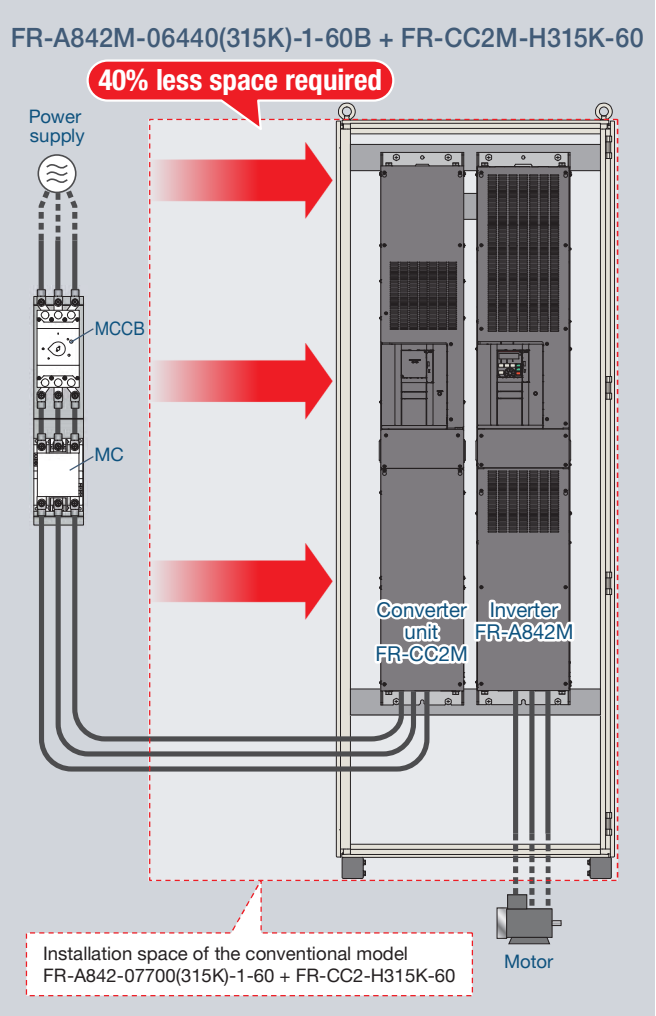

SYSTEM SUPPORT (FUNCTION)

High Equipment Functionality

Numerous functions and the extensive lineup of models are ready to support various systems.

(1) Reduce the shock caused by switching the power source

Phase-synchronized bypass switching (400 V class only) NEW

The FR-A8AVP (option) and the FR-A8VPB (option) make it possible to detect the phase of the commercial power supply. (For wiring details, refer to page 186.)
By synchronizing the inverter output with the phase of the commercial power supply, the spike in the motor current can be suppressed and shock reduced.
Furthermore, the time required for the switching is reduced, which is more beneficial for larger inverters.

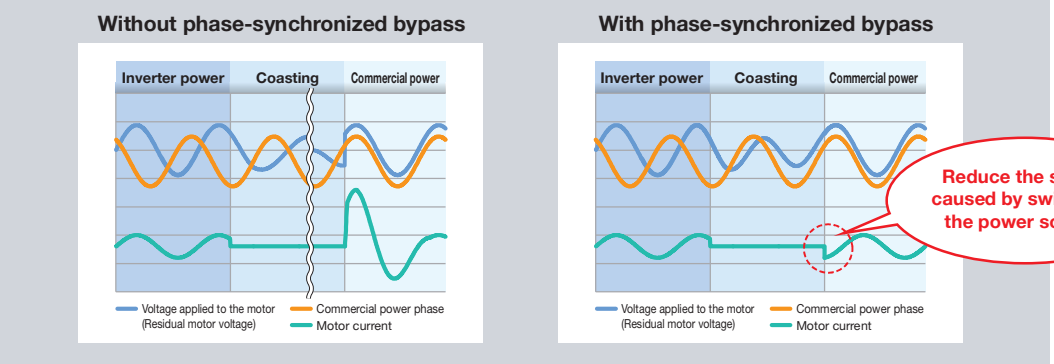

(2) Reduced tact time with functionality suited to the application

Anti-sway control NEW

When an object is moved by a crane, swinging at the time of stopping is suppressed on the crane's transverse axis or traveling axis. This control cuts down the tact time and facilitates efficient operation.

Increased magnetic excitation deceleration NEW

Deceleration time can be reduced without a brake resistor.
Tact time can be eliminated at conveyor lines, etc.

(3) Selection of optimum capacity to suit the application

Multiple rating NEW

Rated current and four different overload capacity ratings (SLD rating (super light duty), LD rating (light duty), ND rating (normal duty), HD rating (heavy duty)) can be selected with parameters. The optimum inverter can be selected to suit the application, and by selecting an inverter with SLD or LD rating, equipment size can be reduced when compared with the FR-A700 series. The HD rating is best suited for applications requiring low speed and high torque.
If using an inverter with capacity of 75K or higher, or motor with capacity of 75 kW or higher, always select and install the inverter based on the capacity of the motor with DC reactor.

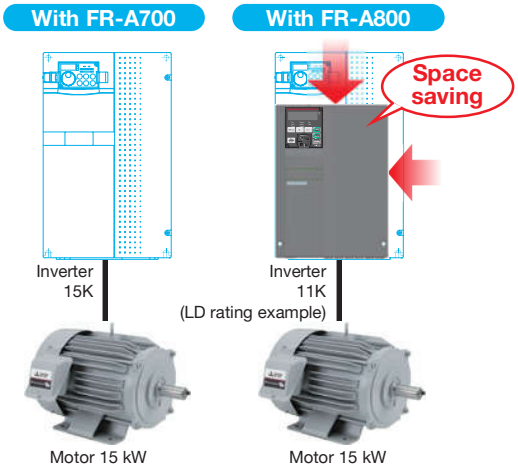

Rating	SLD	LD	ND	HD
	Super light duty	Light duty	Normal duty	Heavy duty
Application	Fan and Pump	Fan and Pump; Tunnel Boring Machines, Winding and Unwinding, Printing Machines; Conveyor	Fan and Pump; Cranes, Press; Conveyor	Fan and Pump
Pr.570 (E301) setting	0	1	2 (Initial value)	3
Overload current rating (inverse-time characteristics)	110% 60 s, 120% 3 s	120% 60 s, 150% 3 s	150% 60 s, 200% 3 s	200% 60 s, 250% 3 s
Surrounding air temperature	40°C	50°C	50°C	50°C

Refer to page 23 for the inverter rating selection.

(4) PLC control with an inverter

Built-in PLC function in an inverter NEW

- Parameters and setting frequency can be changed at the program. Control programs can be created in sequence ladders using the inverter setup software (FR Configurator2).
- Inverter control such as inverter operations triggered by input signals, signal output based on inverter operation status, and monitor output can be freely customized based on the machine specifications.
- All machines can be controlled by the inverter alone, and control can also be dispersed.
- Time-based operation is possible by using in combination with the real-time clock function (optional LCD operation panel (FR-LU08)).
- The FR-A800-E enables communication between multiple inverters using the I/O devices and special registers of the PLC function, which can create a small-scale system by Ethernet using the inverter-to-inverter link function.

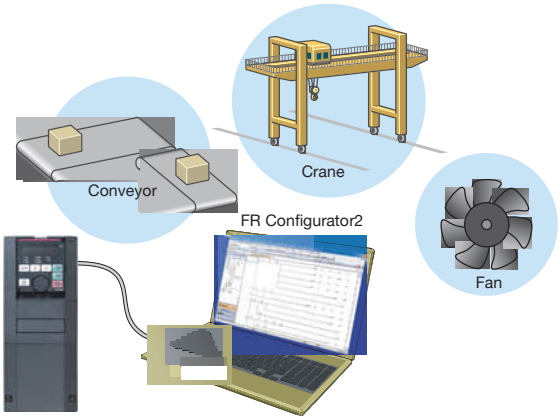

Refer to page 32 for the details.

Extensive lineup

For the details of the lineup, please contact your sales representative.

Standard model

F R - A 8 [2] [0] - [0.4K] - [1] - [ ] [ ]

Symbol	Voltage class
2	200 V class
4	400 V class

Symbol	Structure, functionality
0	Standard model

Symbol[*1]	Description
0.4K to 280K	Applicable motor capacity (ND) (kW)

Symbol	Type[*2]	Communication type
1	FM	RS-485
2	CA	

Symbol	Circuit board coating (IEC60721-3-3:1994 3C2/3S2 compatible)	Plated conductor
None	Without	Without
60	With	Without
06[*3]	With	With

Symbol	Function
None	Standard type
GF	With built-in CC-Link IE Field Network function
GN	CC-Link IE TSN communication function

For the models that indicate the applicable motor capacity, the FM type (-1) and circuit board coating options (none/-60/-06) are offered as standard specifications.
For information on other combinations, contact the nearest Mitsubishi Electric FA center.

F R - A 8 [2] [0] - [0.4K] - [E1] - [ ]

Symbol	Voltage class
2	200 V class
4	400 V class

Symbol	Structure, functionality
0	Standard model

Symbol[*1]	Description
0.4K to 280K	Applicable motor capacity (ND) (kW)

Symbol	Type[*2]	Communication type
E1	FM	Ethernet
E2	CA	

Symbol	Circuit board coating (IEC60721-3-3:1994 3C2/3S2 compatible)	Plated conductor
None	Without	Without
60	With	Without
06[*3]	With	With

For the models that indicate the applicable motor capacity, the FM type (-1) and circuit board coating options (none/-60/-06) are offered as standard specifications.
For information on other combinations, contact the nearest Mitsubishi Electric FA center.

Three-phase 200V class FR-A820-□[*4]	0.4K	0.75K	1.5K	2.2K	3.7K	5.5K	7.5K	11K	15K	18.5K	22K	30K	37K	45K	55K	75K	90K
	00046	00077	00105	00167	00250	00340	00490	00630	00770	00930	01250	01540	01870	02330	03160	03800	04750
	●	●	●	●	●	●	●	●	●	●	●	●	●	●	●	●	●
Three-phase 400V class FR-A840-□[*4]	0.4K	0.75K	1.5K	2.2K	3.7K	5.5K	7.5K	11K	15K	18.5K	22K	30K	37K	45K	55K	75K	90K
	00023	00038	00052	00083	00126	00170	00250	00310	00380	00470	00620	00770	00930	01160	01800	02160	02600
	●	●	●	●	●	●	●	●	●	●	●	●	●	●	●	●	●
	110K	132K	160K	185K	220K	250K	280K										
	03250	03610	04320	04810	05470	06100	06830										
	●	●	●	●	●	●	●										

IP55 compatible model

F R - A 8 [4] [6] - [7.5K] - [1] - [60] [C3]

Symbol	Voltage class
4	400 V class

Symbol	Structure, functionality
6	IP55 compatible model

Symbol[*1]	Description
0.4K to 132K	Applicable motor capacity (ND) (kW)

Symbol	Type[*2]	Communication type
1	FM	RS-485
2	CA	
E1	FM	Ethernet
E2	CA	

Symbol	Circuit board coating (IEC60721-3-3:1994 3C2/3S2 compatible)	Plated conductor
60	With	Without
06	With	With

Symbol	EMC filter
C2	Built-in C2 filter
C3	Built-in C3 filter

For the models that indicate the applicable motor capacity, the FM type (-1/-E1), circuit board coating options (-60/-06), and the EMC filter (C3) are offered as standard specifications.
For information on other combinations, contact the nearest Mitsubishi Electric FA center. IP55 compatible models without circuit board coating are not available.

Three-phase 400V class FR-A846-□ (with a built-in DC reactor)	0.4K	0.75K	1.5K	2.2K	3.7K	5.5K	7.5K	11K	15K	18.5K	22K	30K	37K	45K	55K	75K	90K
	00023	00038	00052	00083	00126	00170	00250	00310	00380	00470	00620	00770	00930	01160	01800	02160	02600
	●	●	●	●	●	●	●	●	●	●	●	●	●	●	●	●	●
	110K	132K															
	03250	03610															
	●	●															

Separated converter type

[Inverter]

F R - A 8 4 2 - 315K - 1 - ☐ ☐

Symbol	Voltage class
4	400 V class

Symbol	Structure, functionality
2	Separated converter type

Symbol[*1]	Description
315K to 500K	Applicable motor capacity (ND) (kW)

Symbol	Type[*2]	Communication type
1	FM	RS-485
2	CA	

Symbol	Circuit board coating (IEC60721-3-3:1994 3C2/3S2 compatible)	Plated conductor
None	Without	Without
60	With	Without
06	With	With

Symbol	Function
None	Standard type
GF	With built-in CC-Link IE Field Network function
P	Parallel operation
GN	CC-Link IE TSN communication function

For the models that indicate the applicable motor capacity, the FM type (-1) and circuit board coating options (none/-60/-06) are offered as standard specifications.
For information on other combinations, contact the nearest Mitsubishi Electric FA center.

F R - A 8 4 2 - 315K - E1 - ☐

Symbol	Voltage class
4	400 V class

Symbol	Structure, functionality
2	Separated converter type

Symbol[*1]	Description
315K to 500K	Applicable motor capacity (ND) (kW)

Symbol	Type[*2]	Communication type
E1	FM	Ethernet
E2	CA	

Symbol	Circuit board coating (IEC60721-3-3:1994 3C2/3S2 compatible)	Plated conductor
None	Without	Without
60	With	Without
06	With	With

For the models that indicate the applicable motor capacity, the FM type (-E1) and circuit board coating options (none/-60/-06) are offered as standard specifications.
For information on other combinations, contact the nearest Mitsubishi Electric FA center.

Three-phase 400V class	315K	355K	400K	450K	500K
	07700	08660	09620	10940	12120
FR-A842-☐[*3]	●	●	●	●	●
FR-A842-☐-P[*3]	–	–	●	●	●

[Converter unit]

F R - C C 2 - H 315K - 60 ☐

Symbol	Voltage class
H	400 V class

Symbol	Description
315K to 630K	Applicable motor capacity (kW)

Symbol	Circuit board coating (IEC60721-3-3:1994 3C2/3S2 compatible)	Plated conductor
60	With	Without
06	With	With

Symbol	Function
None	Standard type
P	Parallel operation

Three-phase 400V class (with a built-in DC reactor)	315K	355K	400K	450K	500K	560K	630K
FR-CC2-H☐	●	●	●	●	●	●	●
FR-CC2-H☐-P	–	–	●	●	●	●	–

*1: Models can be alternatively indicated with the inverter rated current (SLD rating).
(For the FR-A842-P and the FR-A846, the current rating is LD or ND. However, the rated current used to represent the model is the SLD rated current of the standard model.)
*2: Specification differs by the type as follows.

Type	Monitor output	Initial setting			
		Built-in EMC filter	Control logic	Rated frequency	Pr.19 Base frequency voltage
FM (terminal FM equipped model)	Terminal FM (pulse train output) Terminal AM (analog voltage output (0 to ±10 VDC))	OFF	Sink logic	60 Hz	9999 (same as the power supply voltage)
CA (terminal CA equipped model)	Terminal CA (analog current output (0 to 20 mADC)) Terminal AM (analog voltage output (0 to ±10 VDC))	ON	Source logic	50 Hz	8888 (95% of the power supply voltage)

*3: Available for the 5.5K or higher.
*4: For using the 75K or higher inverter and a 75 kW or higher motor, always install a DC reactor (FR-HEL), which is available as an option.
*5: Always install the converter unit (FR-CC2(-P)). (Not required when a high power factor converter (FR-HC2) is used.)

●: Released model

Extensive lineup

For the details of the lineup, please contact your sales representative.

Slim model

FR-A840M-160K-1-60

Symbol	Voltage class
4	400 V class

Symbol	Structure
M	Slim model

Symbol	Structure, functionality
0	Standard model
2	Separated converter type

Symbol	Type*2	Communication type
1	FM	RS-485
2	CA	
E1	FM	Ethernet*3
E2	CA	

Symbol	Circuit board coating (IEC60721-3-3:1994 3C2/3S2 compatible)	Plated conductor	Built-in brake transistor
60	With	Without	Without
06	With	With	Without
60B	With	Without	With*4
06B	With	With	With*4

Symbol	EMC filter
None	Built-in C3 filter
C2	Built-in C2 filter*5

Symbol*1	Description
160K to 500K	Applicable motor capacity (ND) (kW)

For the models that indicate the applicable motor capacity, the FM type (-1/-E1) and circuit board coating options (-60/-06) are offered as standard specifications.
For information on other combinations, contact the nearest Mitsubishi Electric FA center.

Model	160K	200K	250K	280K	315K	355K	400K	450K	500K
	03630	04540	05080	05720	06440	07260	08170	09080	10160
FR-A840M-□	●	●	—	—	—	—	—	—	—
FR-A842M-□ (Separated converter type)	—	—	●	●	●	●	●	●	●
Model	250K	280K	315K	355K	400K	450K	500K	560K	
FR-CC2M-□ (Converter unit)	●	●	●	●	●	●	●	●	

*1: Models can be alternatively indicated with the inverter rated current (SLD rating).
*2: Specifications differ by type. Major differences are shown in the following table.

Type	Monitor output	Initial setting			
		Built-in EMC filter	Control logic	Rated frequency	Pr.19 Base frequency voltage
FM (terminal FM equipped model)	Terminal FM: pulse train output Terminal AM: analog voltage output (0 to ±10 VDC)	OFF*3	Sink logic	60 Hz	9999 (same as the power supply voltage)
CA (terminal CA equipped model)	Terminal CA: analog current output (0 to 20 mADC) Terminal AM: analog voltage output (0 to ±10 VDC)	ON	Source logic	50 Hz	8888 (95% of the power supply voltage)

*3: Inverter equipped with a built-in Ethernet board (FR-A8ETH).
*4: Available for the 315K or lower.
*5: Available for the 200K or lower.
*6: ON when the inverter has a built-in Class C2 EMC filter.

Safety communication model

FR-A840-0.4K-F1

Symbol	Voltage class
2	200 V class
4	400 V class

Symbol	Structure, functionality
0	Standard model
2	Separated converter type

Symbol	Description
0.4K to 500K	Applicable motor capacity (ND) (kW)

Symbol	Function*1
F	Safety communication model (RS-485 model)

Symbol	Type*2
1	FM

Three-phase 200V class FR-A820-□*6	0.4K	0.75K	1.5K	2.2K	3.7K	5.5K	7.5K	11K	15K	18.5K	22K	30K	37K	45K	55K	75K	90K
	00046	00077	00105	00167	00250	00340	00490	00630	00770	00930	01250	01540	01870	02330	03160	03800	04750
	●	●	●	●	●	●	●	●	●	●	●	●	●	●	●	●	●
Three-phase 400V class FR-A840-□*4	0.4K	0.75K	1.5K	2.2K	3.7K	5.5K	7.5K	11K	15K	18.5K	22K	30K	37K	45K	55K	75K	90K
	00023	00038	00052	00083	00126	00170	00250	00310	00380	00470	00620	00770	00930	00116	01800	02160	02600
	●	●	●	●	●	●	●	●	●	●	●	●	●	●	●	●	●
	110K	132K	160K	185K	220K	250K	280K										
	03250	03610	04320	04810	05470	06100	06830										
	●	●	●	●	●	●	●										
Three-phase 400V class FR-A842-□*4	315K	355K	400K	450K	500K												
	07700	08660	09620	10940	12120												
	●	●	●	●	●												

*1: Install the FR-A8NCG-S to use the function.
*2: The specifications are shown in the following table.

Type	Monitor output	Initial setting			
		Built-in EMC filter	Control logic	Rated frequency	Pr.19 Base frequency voltage
FM (terminal FM equipped model)	Terminal FM: pulse train output Terminal AM: analog voltage output (0 to ±10 VDC)	OFF	Sink logic	60 Hz	9999 (same as the power supply voltage)

*3: For using the 75K or higher inverter and a 75 kW or higher motor, always install a DC reactor (FR-HEL), which is available as an option.
*4: Always install the converter unit (FR-CC2). (Not required when a high power factor converter (FR-HC2) is used.)

● : Released, — : Not applicable
Specifications of the models to be released are subject to change without prior notice.

Inverter by rating

The following table shows examples for selecting the standard model.

•200 V class

Inverter model FR-A820-□		SLD (Super light duty)		LD (Light duty)		ND (Normal duty initial value)		HD (Heavy duty)	
		Motor capacity (kW)*1	Rated current (A)	Motor capacity (kW)*1	Rated current (A)	Motor capacity (kW)*1	Rated current (A)	Motor capacity (kW)*1	Rated current (A)
0.4K	00046	0.75	4.6	0.75	4.2	0.4	3	0.2	1.5
0.75K	00077	1.5	7.7	1.5	7	0.75	5	0.4	3
1.5K	00105	2.2	10.5	2.2	9.6	1.5	8	0.75	5
2.2K	00167	3.7	16.7	3.7	15.2	2.2	11	1.5	8
3.7K	00250	5.5	25	5.5	23	3.7	17.5	2.2	11
5.5K	00340	7.5	34	7.5	31	5.5	24	3.7	17.5
7.5K	00490	11	49	11	45	7.5	33	5.5	24
11K	00630	15	63	15	58	11	46	7.5	33
15K	00770	18.5	77	18.5	70.5	15	61	11	46
18.5K	00930	22	93	22	85	18.5	76	15	61
22K	01250	30	125	30	114	22	90	18.5	76
30K	01540	37	154	37	140	30	115	22	90
37K	01870	45	187	45	170	37	145	30	115
45K	02330	55	233	55	212	45	175	37	145
55K	03160	75	316	75	288	55	215	45	175
75K	03800	90/110	380	90	346	75	288	55	215
90K	04750	132	475	110	432	90	346	75	288

•400 V class

Inverter model FR-A840-□		SLD (Super light duty)		LD (Light duty)		ND (Normal duty initial value)		HD (Heavy duty)	
		Motor capacity (kW)*1	Rated current (A)	Motor capacity (kW)*1	Rated current (A)	Motor capacity (kW)*1	Rated current (A)	Motor capacity (kW)*1	Rated current (A)
0.4K	00023	0.75	2.3	0.75	2.1	0.4	1.5	0.2	0.8
0.75K	00038	1.5	3.8	1.5	3.5	0.75	2.5	0.4	1.5
1.5K	00052	2.2	5.2	2.2	4.8	1.5	4	0.75	2.5
2.2K	00083	3.7	8.3	3.7	7.6	2.2	6	1.5	4
3.7K	00126	5.5	12.6	5.5	11.5	3.7	9	2.2	6
5.5K	00170	7.5	17	7.5	16	5.5	12	3.7	9
7.5K	00250	11	25	11	23	7.5	17	5.5	12
11K	00310	15	31	15	29	11	23	7.5	17
15K	00380	18.5	38	18.5	35	15	31	11	23
18.5K	00470	22	47	22	43	18.5	38	15	31
22K	00620	30	62	30	57	22	44	18.5	38
30K	00770	37	77	37	70	30	57	22	44
37K	00930	45	93	45	85	37	71	30	57
45K	01160	55	116	55	106	45	86	37	71
55K	01800	75/90	180	75	144	55	110	45	86
75K	02160	110	216	90	180	75	144	55	110
90K	02600	132	260	110	216	90	180	75	144
110K	03250	160	325	132	260	110	216	90	180
132K	03610	185	361	160	325	132	260	110	216
160K	04320	220	432	185	361	160	325	132	260
185K	04810	250	481	220	432	185	361	160	325
220K	05470	280	547	250	481	220	432	185	361
250K	06100	315	610	280	547	250	481	220	432
280K	06830	355	683	315	610	280	547	250	481

•Overload current rating

SLD	110% 60 s, 120% 3 s (inverse-time characteristics) at surrounding air temperature of 40°C
LD	120% 60 s, 150% 3 s (inverse-time characteristics) at surrounding air temperature of 50°C
ND	150% 60 s, 200% 3 s (inverse-time characteristics) at surrounding air temperature of 50°C
HD	200% 60 s, 250% 3 s (inverse-time characteristics) at surrounding air temperature of 50°C

*1: The applicable motor capacity is the maximum applicable capacity of a Mitsubishi Electric 4-pole standard motor.

For information on selecting the DC reactor, refer to page 223.

Dedicated inverter for specialized field

FR-A800 Plus Series

FR-A800-AWH

- **Full-closed control**
  This function is used to operate logistics/transport equipment in combination with distance meters and the host controller.
- **Reducing tact time**
  The anti-sway function minimizes the swinging of the frame of the crane while the shuttle car is traveling.
- **System support**
  The inverter operation is controlled by inputting the start command, speed command, and stop position command from the master to the inverter via communication.

FR-A800-CRN

- **Reduction in tact time**
  Specialized functions such as anti-sway control facilitate efficient operation.
- **Load slippage prevention**
  Optimum brake operation is obtained. It is possible to detect the slippage at a start of operation.
- **Dedicated monitoring functions**
  Overload detection and start time counting are possible.
- **Easy maintenance**
  Protection against vibration, dust and dirt, or corrosion is also available.

A800 Plus

A800 Plus

A new lineup of dedicated inverters for specialized fields are born!

Plus! The optimum functions for each dedicated field are added to the already high performance and high functionality FR-A800 series inverter.

FR-A800-R2R

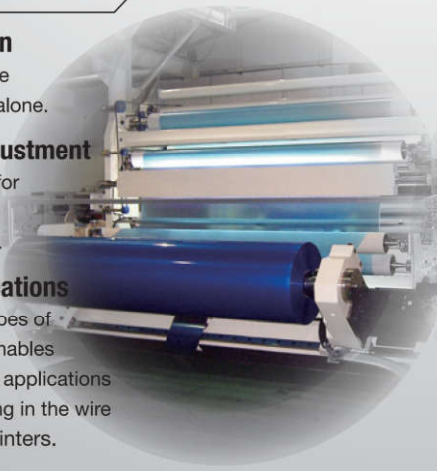

- **System simplification**
  Winding/unwinding can be stabilized by the inverter alone.
- **Easy startup and adjustment**
  Parameters can be used for mechanical adjustment according to applications.
- **Wide range of applications**
  The inverter offers four types of control functions which enables the use in various system applications such as winding/unwinding in the wire drawing machines and printers.

FR-A800-LC

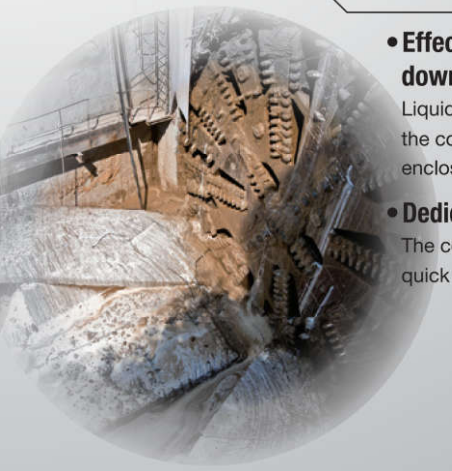

- **Effective solution for downsizing of the enclosure**
  Liquid cooling enables installation of the cooling system outside of the enclosure.
- **Dedicated monitoring functions**
  The coolant flow is monitored for quick detection of system faults.

Format

Optimum functions for cranes

FR-A800-CRN

F R - A 8 **2** **0** - **0.4K** - **1** - **60** **CRN**

Symbol	Voltage class
2	200 V class
4	400 V class

Symbol	Structure, functionality
0	Standard model*4
2	Separated converter type

Capacity*1	Description
0.4K to 500K	Applicable motor capacity (ND) (kW)

Symbol	Type	Communication type
1	FM	RS-485
2	CA*2	
E1	FM	Ethernet
E2	CA*2	

Symbol	Circuit board coating (IEC60721-3-3:1994 3C2/3S2 compatible)	Plated conductor	Enhanced vibration resistance
60	With	Without	Without
06*3	With	With	Without
61	With	Without	With
16*3	With	With	With

Symbol	Dedicated function
CRN	Crane dedicated model

Inverter model	Inverter capacity
FR-A820	0.4kW to 90kW
FR-A840	0.4kW to 280kW
FR-A842	315kW to 500kW

*1: Models can be alternatively indicated with the inverter rated current (SLD rating).
*2: For the CA type, the monitor output terminal F/C operates as terminal CA (analog current output: 0 to 20 mADC), not as terminal FM (pulse train output).
*3: Available for the 5.5K or higher.
*4: For the 75K or higher inverter, or whenever a 75 kW or higher motor is used, always connect a DC reactor (FR-HEL), which is available as an option.

For the models that indicate the applicable motor capacity, the FM type (-1/-E1) and circuit board coating options (-60/-06/-61/-16) are offered as standard specifications.
For information on other combinations, contact the nearest Mitsubishi Electric FA center. Crane dedicated models without circuit board coating are not available.

Optimum functions for roll to roll applications

FR-A800-R2R

F R - A 8 **2** **0** - **0.4K** - **1** - ** ** **R2R**

Symbol	Voltage class
2	200 V class
4	400 V class

Symbol	Structure, functionality
0	Standard model*4
2	Separated converter type

Capacity*1	Description
0.4K to 500K	Applicable motor capacity (ND) (kW)

Symbol	Type	Communication type
1	FM	RS-485
2	CA*2	
E1	FM	Ethernet
E2	CA*2	

Symbol	Circuit board coating (IEC60721-3-3:1994 3C2/3S2 compatible)	Plated conductor
None	Without	Without
60	With	Without
06*3	With	With

Symbol	Dedicated function
R2R	Roll to roll dedicated model

Inverter model	Inverter capacity
FR-A820	0.4kW to 90kW
FR-A840	0.4kW to 280kW
FR-A842	315kW to 500kW

*1: Models can be alternatively indicated with the inverter rated current (SLD rating).
*2: For the CA type, the monitor output terminal F/C operates as terminal CA (analog current output: 0 to 20 mADC), not as terminal FM (pulse train output).
*3: Available for the 5.5K or higher.
*4: For the 75K or higher inverter, or whenever a 75 kW or higher motor is used, always connect a DC reactor (FR-HEL), which is available as an option.

For the models that indicate the applicable motor capacity, the FM type (-1/-E1) and the option without circuit board coating are offered as standard specifications.
For information on other combinations, contact the nearest Mitsubishi Electric FA center.

Liquid Cooled Type Inverter

FR-A800-LC

F R - A 8 **4** 0 - **280K** - **1** - ** ** **LC**

Symbol	Voltage class
4	400 V class

Capacity*1	Description
110K to 280K	Applicable motor capacity (ND) (kW)

Symbol	Type	Communication type
1	FM	RS-485
2	CA*2	
E1	FM	Ethernet
E2	CA*2	

Symbol	Circuit board coating (IEC60721-3-3:1994 3C2/3S2 compatible)	Plated conductor
None	Without	Without
60	With	Without
06	With	With

Symbol	Function
LC	Liquid cooled type

*1: Models can be alternatively indicated with the inverter rated current (SLD rating).
*2: For the CA type, the monitor output terminal F/C operates as terminal CA (analog current output: 0 to 20 mADC), not as terminal FM (pulse train output).

For the models that indicate the applicable motor capacity, the FM type (-1/-E1) and the option without circuit board coating are offered as standard specifications.
For information on other combinations, contact the nearest Mitsubishi Electric FA center.

Logistics/Transport Dedicated Inverter

FR-A800-AWH

F R - A 8 **2** 0 - **0.4K** - **1** - ** ** **AWH**

Symbol	Voltage class
2	200 V class
4	400 V class

Capacity*1*3	Description
0.4K to 90K	Applicable motor capacity (ND) (kW)

Symbol	Type	Communication type
1	FM	RS-485
2	CA*2	
E1	FM	Ethernet
E2	CA*2	

Symbol	Circuit board coating (IEC60721-3-3:1994 3C2/3S2 compatible)	Plated conductor
None	Without	Without
60	With	Without
06*3	With	With

Symbol	Dedicated function
AWH	Logistics/transport model

Inverter model	Inverter capacity
FR-A820	0.4kW to 90kW
FR-A840	0.4kW to 90kW

*1: Models can be alternatively indicated with the inverter rated current (SLD rating).
*2: For the CA type, the monitor output terminal F/C operates as terminal CA (analog current output: 0 to 20 mADC), not as terminal FM (pulse train output).
*3: Available for the 5.5K or higher.
*4: For the 75K or higher inverter, or whenever a 75 kW or higher motor is used, always connect a DC reactor (FR-HEL), which is available as an option.

For the models that indicate the applicable motor capacity, the FM type (-1/-E1) and circuit board coating options (none/-60/-06) are offered as standard specifications.
For information on other combinations, contact the nearest Mitsubishi Electric FA center.

Dedicated inverter for specialized field

FR-A800 Plus Series

Pursuing optimum functions to meet our customers' needs

A lineup of dedicated inverters for specialized fields are offered.
Plus! The optimum functions for each dedicated field are added to the already high performance and high functionality FR-A800 series inverter.

Optimum functions for cranes

FR-A800-CRN

Reduction in tact time

By using the Mitsubishi Electric's original anti-sway control technology, the swinging of an object moved by a crane is suppressed at the time of stopping, even without operator's input adjustment. This control cuts down the tact time and facilitates efficient operation.

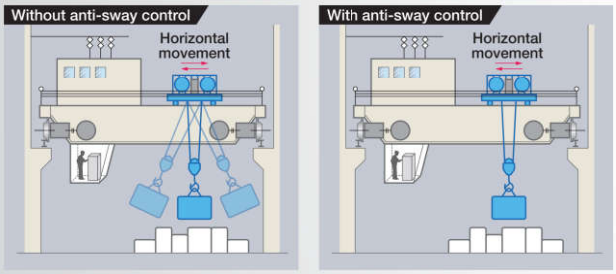

Load slippage prevention

- The highly scalable brake sequence function enables the output of a brake opening signal for the optimum brake operation calculated from the load torque or the speed.
- Slippage during the start of a lift can be checked. (A speed detector such as an encoder is required.)

Dedicated monitoring functions

- A signal can be output when too much load is applied.
- The inverter starting times can be counted to determine the timing of the maintenance.

Optimum functions for roll to roll applications

FR-A800-R2R

Winding/unwinding shaft

Tension control (speed control / torque control) is enabled by inputting the dancer roll position or the feedback from the tension sensor.
Stable control can be achieved by winding diameter calculation, even with a large difference between the maximum and minimum diameters.

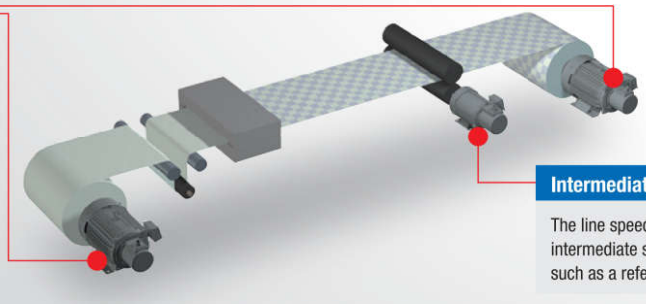

Intermediate shaft

The line speed is controlled by driving the intermediate shafts with a constant winding diameter, such as a reference shaft or the feeding shaft.

System simplification

The FR-A800-R2R inverter has various dedicated functions for dancer control and tension control (winding diameter calculation, etc.), providing stable winding/unwinding control independently.

Easy startup and adjustment

Mechanical settings and adjustment according to applications can be achieved just by setting parameters, which enables the startup and adjustment work of the system by the inverter alone. (Tension PI gain automatic adjustment function)

Wide range of applications

The inverter offers four types of control functions which enables the use in various system applications such as winding/unwinding in the wire drawing machines and printers.

- Dancer feedback speed control
- Tension sensor feedback speed control
- Tension sensorless torque control
- Tension sensor feedback torque control

Liquid Cooled Type Inverter

FR-A800-LC

Effective solution for downsizing of the enclosure

A smaller enclosure can be used since the quantity of the heat dissipated in the enclosure is reduced.

Dedicated monitoring functions

A sensor (flow switch) is attached at the inlet of coolant to send a signal to the inverter. When the coolant flow rate decreases, a warning is output, enabling quick, direct detection of system faults.

Logistics/Transport Dedicated Inverter

FR-A800-AWH

Full-closed control

This function is used to operate logistics/transport equipment in combination with distance meters and the host controller. The logistics/transport equipment is moved while position loop is compensated by inputting the feedback of the position detected by the distance meter.

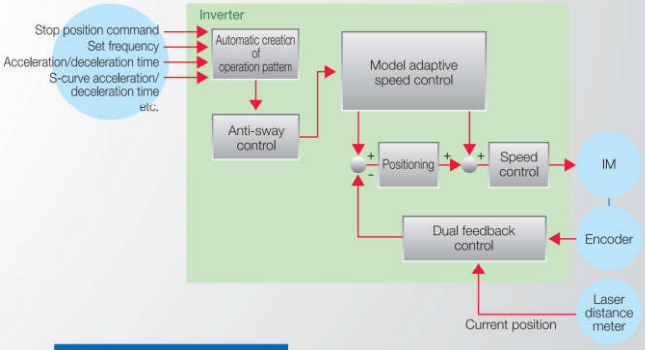

Reducing tact time

- **Anti-sway control**

  This function minimizes the swinging of the crane frame while the shuttle car is traveling.
  This will contribute to tact time reduction as less time is required for the swinging to stop.

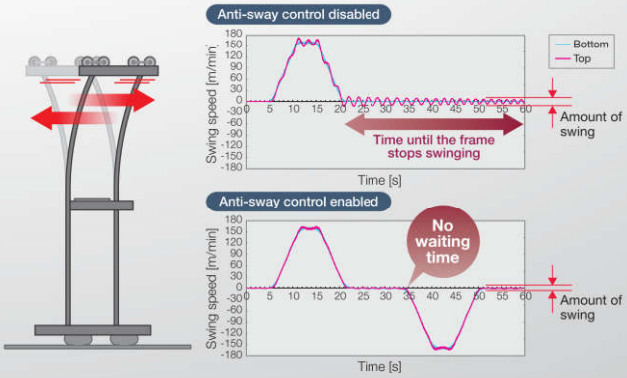

System support

- **Network**

  The master gives the start command, speed command, or stop position command to the inverters through communication for the driving control.

Type	Network	Remarks
Command interface	CC-Link IE Field	When used with FR-A8NCE
	CC-Link IE Field Basic	Ethernet models only
	CC-Link	When used with FR-A8NC
Feedback (distance meter)	RS-422	RS-485 models only
	Ethernet	Ethernet models only
	SSI	When used with FR-A8APS-02

Application example

BEST SUITED FOR EVERY MACHINE

Line Control (Winding and Unwinding)

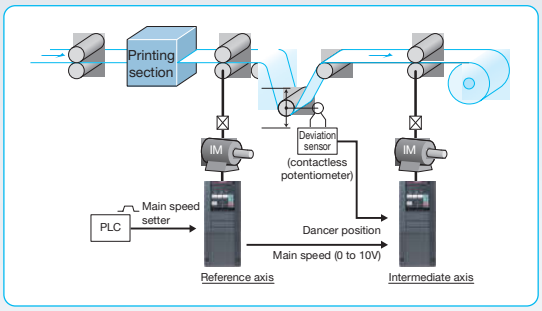

Point

Material tension is kept constant by employing speed control and torque control to eliminate slack and uneven winding. By using a motor with the speed ratio most appropriate for the machine, the inverter capacity can be downsized.

Typical industries

- Textile industry
- Steel industry
- Pulp, paper, paper products manufacturing industries

Dancer control NEW

The dancer control detects the dancer roll positions and performs PID operation to keep the sheet tension constant.

Traverse function NEW

The traverse function, used for the traverse axis of spinning machine, prevents uneven winding or collapsing.

Torque accuracy

	Real sensorless vector control	Vector control
Torque control range	1 : 20	1 : 50
Absolute torque accuracy*1	±20%	±10%*3
Repetitive torque accuracy*2	±10%	±5%*3

*1: Difference between the actual torque and the torque command
*2: Fluctuation between the average of the actual torque and the actual measured torque (repeatability of the torque)
*3: When online auto tuning (adaptive magnetic flux observer) enabled

Cranes

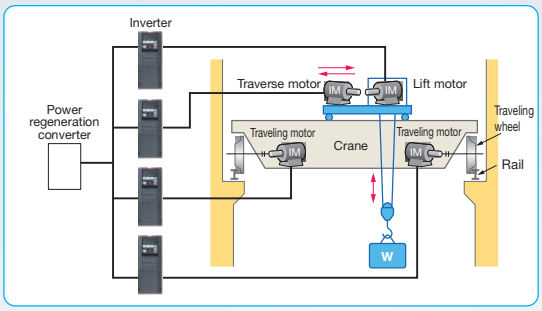

Point

Relentless operation is possible with HD rating when lifting. And when traveling, vibrations applied to objects being conveyed are suppressed with anti-sway control, facilitating efficient operation.

Typical industries

- Lumber, wood product manufacturing industries
- Steel industry
- Warehousing
- Water transportation
- Textile industry
- Metal products manufacturing

High torque at low speed

[Starting torque]
- Real sensorless vector control 200% (ND rating)
- Vector control 200% (ND rating)
  (150% of initial setting for the 5.5K and higher)

[Zero-speed torque]
- Vector control: 200% (Select HD rating.)

PLC function NEW

By employing synchronous operation for gate-type cranes, positional displacement of both axes is corrected during travel, achieving highly accurate control without using an external controller.

Anti-sway control NEW

When an object is moved by a crane, swinging at the time of stopping is suppressed on the crane's transverse axis or traveling axis.
This control cuts down the tact time and facilitates efficient operation.

Tunnel Boring Machines

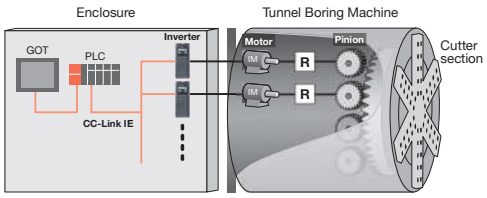

Point

Inverters can be used to provide high starting torque for digging, and for transferring earth and sand after digging. A lineup of products compatible with the IP55 protective structure is available as a separate series.

Typical industries

Construction industry

Real sensorless vector control

Motors are controlled without encoders, which are susceptible to hazardous environment. Use of such motors naturally provides higher reliability. Torque accuracy has also improved because the temperature is better controlled.

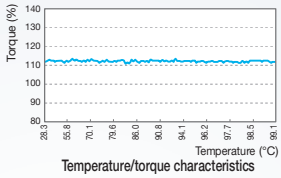

Temperature/torque characteristics

Droop control

This function balances the load between motors when using multiple inverters.

CC-Link IE communication

CC-Link IE communication enables a programmable controller or a GOT to control multiple inverters. By using Ethernet cables, less wiring is required.

Machine Tools

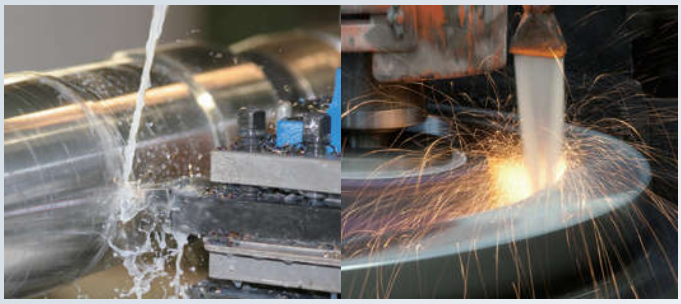

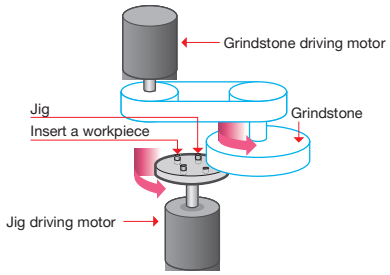

Point

The rotation speed can be set according to the material being processed. Stable high-speed rotation is also possible.

Typical industries

Metal products manufacturing

High-speed operation

[Operating frequency]
- V/F control 590 Hz
- Vector control 400 Hz
- Real sensorless vector control 400 Hz

Torque limit function

This is effective in preventing machine damage (tool damage prevention, etc.) due to sudden disturbance torque.

Orientation control (vector control)

The inverter can adjust the stop position (Orientation control) using an encoder attached to a place such as the main shaft of the machine.

Application example

BEST SUITED FOR EVERY MACHINE

Wood Processing Machines

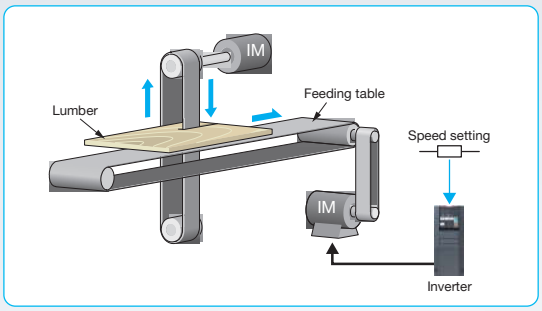

Point

Even when processing areas of varying hardness such as lumber knots, processing time delays are suppressed by minimizing reductions in motor speed.

Typical industries

Lumber, wood product manufacturing industries	Forestry

Real sensorless vector control, vector control

Improved speed response to sudden load fluctuations when compared with the previous model (FR-A700).

[Response speed]

- Real sensorless vector control 50 Hz*1 (A700: 20 Hz)
- Vector control 130 Hz (A700: 50 Hz)

*1: At 3.7 kW with no load. Differs depending on the load conditions and motor capacity.

Torque limiting function

This function is effective in preventing machine damage (tool damage, etc.) due to sudden disturbance torque.

Conveyance

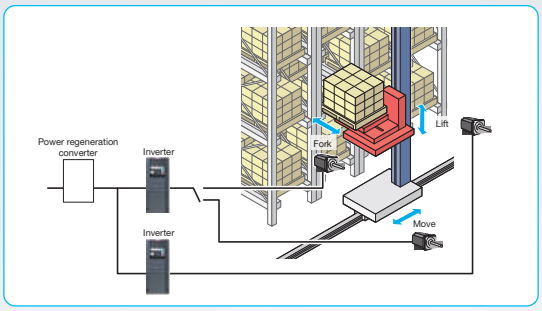

Point

The new series offers a wealth of functionality suited to applications such as high-accuracy conveyance and target position stoppage, which contributes to reduction in tact time.

Typical industries

Steel industry	Metal products manufacturing
Lumber, wood product manufacturing industries	Textile industry
Water transportation, fishing industry	Warehousing

PM sensorless vector control

Multiple axes are strictly controlled to run at the same speed without using a driving belt. This control method provides driving accurate enough for transporting glass substrates without damaging them. Simple positioning control is also available.

(when high frequency superposition control selected in combination with EM-A)

Increased magnetic excitation deceleration NEW

Deceleration time can be reduced without a brake resistor.
Tact time can be eliminated at conveyor lines, etc.

PLC function NEW

When a few sensors are used to check the presence of goods on a conveyor and the arrival of such goods, the inverter can directly receive such signals from the sensors for the PLC control.

Printing Machines

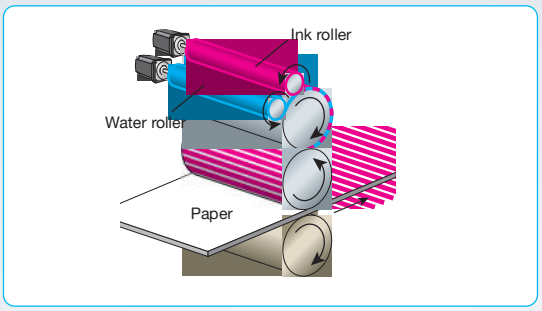

Point The highly-accurate speed control minimizes color unevenness and displaced prints.

Typical industries

Printing and related industries

Speed control

	Real sensorless vector control	Vector control	PM sensorless vector control
Speed response	50 Hz*1	130 Hz	25 Hz
Speed control range	1:200 (when power drive at 0.3 Hz to 60 Hz)	1:1500 (both driving/ regeneration*2)	1:1000*3

*1: At 3.7 kW with no load. Differs depending on the load conditions and motor capacity.
*2: If using regeneration unit (option) during regeneration
*3: When high frequency superposition control is selected for the combination with the EM-A 0.75kW

PM sensorless vector control

The speed fluctuations of the ink roller axis and water roller axis are minimized to eliminate print unevenness.

[Speed fluctuation ratio] ±0.05% (Digital input)
"No encoder" means less trouble and higher reliability.

Compressors

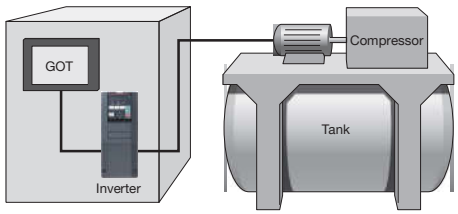

Point The PM sensorless vector control is useful in generating high starting torque. By using this control method with an PM motor, much power can be saved. This small motor also makes the machine small.

Typical industries

- Steel industry
- Metal products manufacturing
- Lumber, wood product manufacturing industries
- Textile industry
- Water transportation, fishing industry
- Warehousing

PM sensorless vector control

Smooth operation is possible even at start-up under high load.

[Starting torque] 200%
When high frequency superposition control selected in combination with EM-A

PID control

Pressure can be automatically adjusted by converting signals from the encoder to inverter input signals and feeding them back.

Parallel operation function NEW

Even a large compressor can be operated by FR-A842-P inverters with parallel operation function, which can operate a 630 kW or higher motor.

CONTRIBUTION TO FACTORY AUTOMATION

The PLC function will help you to provide the control sequence best suited for the machine specifications.

1 Inverter operation sequence customized for the machine

•A set of operations (operation at different signal inputs, signal and monitor outputs at different inverter status, etc.) can be freely programmed in accordance with the machine specifications. For example, a shutter opening/closing can be performed based on a signal from a sensor, or based on the opening/closing times.
Control programs can be created in sequence ladders using the inverter setup software (FR Configurator2).

2 Realizes the decentralized control

•The control of the whole system is decentralized to inverters that mange their subordinating devices individually.

•A group of dedicated sequence programs is created and saved in each inverter. The master controller no longer has to process all the sequence programs, and the decentralized system accepts program changes more flexibly.

3 Automatic operation in accordance with the time

•With the real-time clock, automatic operation can be performed at certain times (when the optional LCD operation panel (FR-LU08) is used).

4 Useful functions

• User parameter
Up to 50 parameters, which are linked with the data registers, can be saved. The variables (data registers) used in the PLC function can be saved as inverter parameters. Furthermore, parameter settings can be saved in the EEPROM of inverter. When results of calculation using the PLC function are saved in the parameters, the data can be retained after the power is turned OFF.

• User initiated fault
Inverter output can be shut off under conditions other than those of the existing protective functions. Up to five specific fault-initiating conditions can be set to activate a protective function and shut off the inverter output.

• Monitored item for the user
Special register values can be displayed for monitoring on the operation panel. Arbitrary data designated by the user such as results of calculation using the PLC function can be displayed.

• Inverter parameter read/write
Parameter settings can be changed using sequence programs. The acceleration/deceleration patterns can also be set with sequence programs to be changed at certain operation statuses. You can choose RAM or EEPROM to save the parameter settings. When the settings are changed frequently, choose RAM.

• PID function
Two different loops of PID inverter operations can be pre-set, and those can be controlled using sequence programs.

• Inverter operation lock
The inverter operation can be restricted for the command sources other than the sequence programs.

PLC function

Item	Description
I/O	
General-purpose I/O	Sequence programs enable I/O signal transmission to/from the inverter and its plug-in options.
Analog I/O	Sequence programs enable reading of analog input values or analog output transmission by the inverter, and analog output transmission to the plug-in options.
Pulse train I/O	Sequence programs enable pulse train inputs (to terminal JOG) and pulse train outputs (from terminal F/C(FM)).
Inverter parameter read/write	Sequence programs enable inverter parameter write/read.
User parameter	Fifty user parameters (Pr.1150 to Pr.1199) are available and are linked with the data registers D206 to D255, which accept direct access by sequence programs.
CC-Link	A plug-in option (FR-A8NC) enables handling of remote registers as arbitrary data in the sequence programs.
Special function	
PID operation	Inverter's PID operations can be set (up to two loops).
User initiated fault	Up to five fault-initiating conditions can be set to activate a protective function.
Fault clear	The protective function occurring in the inverter can be reset.
Inverter operation lock	Inverters can start up while the PLC function is running.
Monitored item for the user	Desired data is displayable on the operation panel.

Application example

Crane control

Point

The traveled distance (total number of travel pulses) of each wheel is directly read from the encoder installed at the wheel. The pulses from the two wheels are then compared, and their speed is adjusted to synchronize the wheel positions. There is no need to use an external controller to offset speed, allowing high accuracy control.

User initiated fault

Up to five protective functions operating under specific conditions can be set. Protective functions can be triggered to block inverter output at such times as when positional displacements are not eliminated even after offsetting speed over a fixed period of time, or pulses from the PLGs on both wheels are not input.

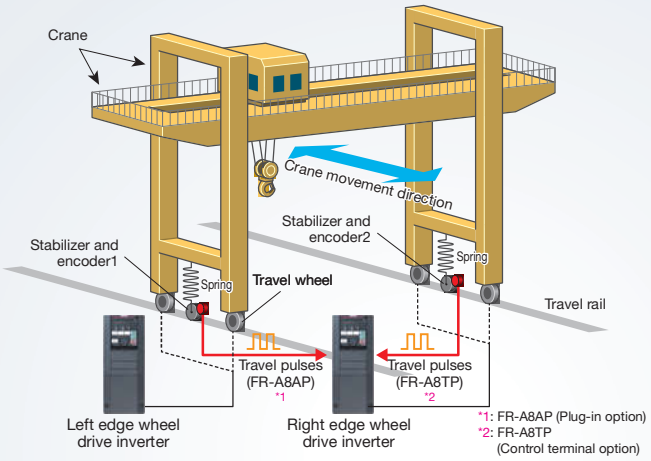

Conveyor control

Point

The workpiece positions detected by sensors are directly reported to the inverter, and the inverter sends out the operation commands to the conveyor robot and to the extruding machine. Whole control can be performed by an inverter, in accordance with the movement of its peripheral equipment.

Inverter parameter read/write

Changes can be made to inverter parameters from the sequence program. The acceleration/deceleration time and pattern can be set based on the type of workpiece.

Inverter operation lock

Operation is possible only when the sequence function is enabled. Changes to settings caused by operator error can be avoided.

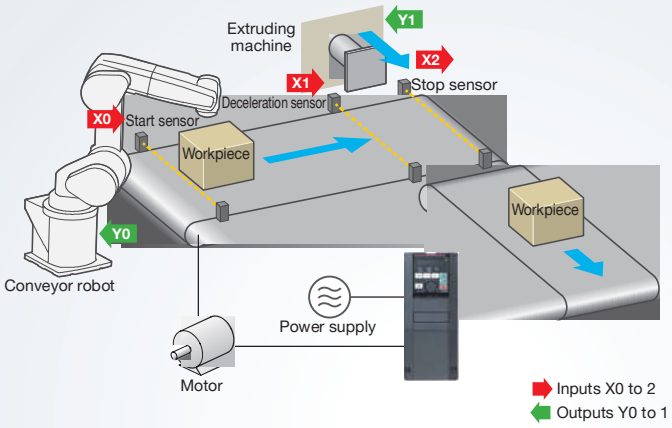

Fan control

Point

Signals sent via the enclosure (relay panel, etc.) such as input magnetic contactor signals, watt hour meter signals, and sensor signals can be read directly into the inverter and controlled. A fan can be controlled in accordance with the conditions without using relays, etc.
And by employing an external 24 VDC power supply for the control power, input MC signals can be turned ON and OFF, regardless of the existence of a main circuit power supply.

CC-Link

A plug-in option (FR-A8NC) enables handling of remote registers as arbitrary data in the sequence programs.
A variety of equipment inside the factory can be centrally controlled with a CC-Link Network.

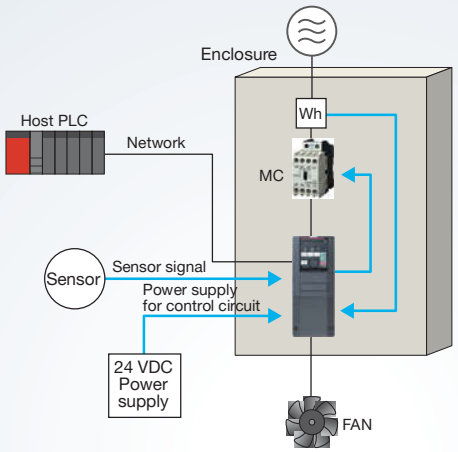

Inverter setup software

FR Configurator2 (SW1DND-FRC2)

DELIVERING A COMFORTABLE INVERTER

From inverter startup to maintenance, this versatile software allows the user to specify settings easily at the computer.

[Compatible operating systems]
Windows® 11(Home, Pro, Enterprise)

Easy connection with a USB cable

A USB connector (Mini-B connector) is provided as standard. Easy connection to the computer without the need for a converter.

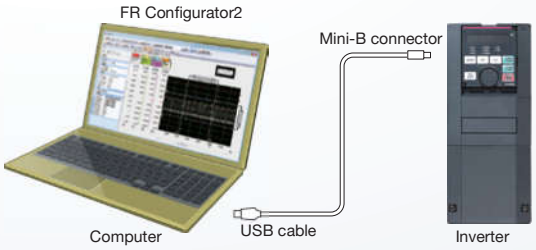

Intuitive user interface

Connected inverters are displayed in tree view format. Windows for each function can be accessed by changing the tab for maximum efficiency.

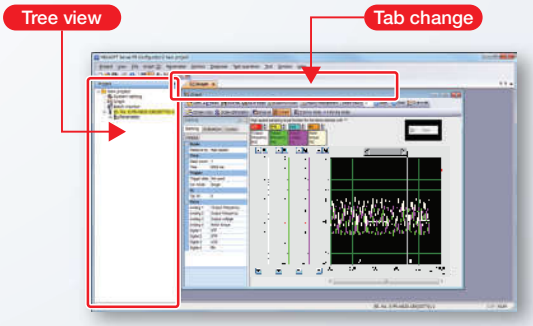

Work can be carried out away from the equipment using a USB memory device

By loading trace data and parameter settings copied to a USB memory device into FR Configurator2, analysis and adjustments can be carried out with ease away from the equipment.

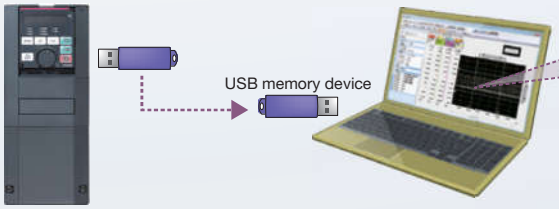

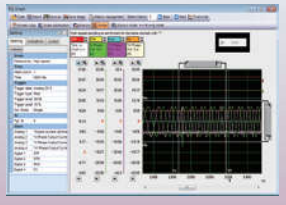

Graph function

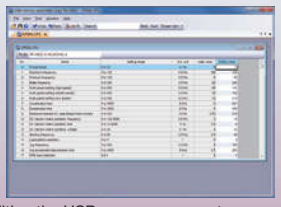

Editing the USB memory parameter copy file

Sequence control (Developer function)

The Developer function is used for creating sequence programs and writing them to the inverter to enable the use of the PLC function of the inverter.

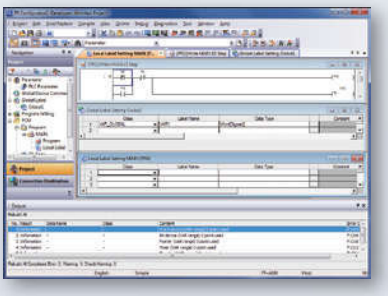

Free trial version Supported

The following table shows the functions available in the free trial version (usable free of charge with limited functions). It can be downloaded at Mitsubishi Electric FA Global Website.

Function	Free trial version	Function	Free trial version
Parameter list	○	Convert	○
Diagnosis	○	Developer	×
AI fault diagnosis	×	USB memory parameter copy file edit	×
Graph	×	Ethernet parameter setting	○
Batch monitor	×	iQSS backup file conversion	○
Test operation	○	Firmware Update Tool	○
I/O terminal monitor	×	Help	○

○: Available, ×: Not available

A full functional trial version, which has the same functionality as the release version, is also offered for a limited period of 30 days.

OPERATING ENVIRONMENT

1 Efficient startup settings

System settings

Free trial version Supported

This sets the method used to connect the inverters and the computer. Automatic recognition of connected inverters can also be set. The station number, model, capacity, and plug-in options of the connected inverters can also be set manually.

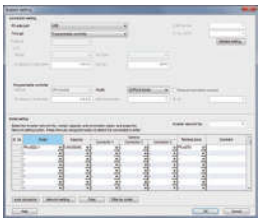

Test operation

Free trial version Supported

Operating commands, frequency settings, and the operating mode can be set for the selected inverter.

Conversion function

Free trial version Supported

Parameters can be set with the parameter auto conversion function when renewing from the FR-A700 series or FR-A500 series.

2 Perform pre-operation adjustments and checks during operation with ease

Parameter list

Free trial version Supported

Parameters for selected station numbers can be displayed and changed.

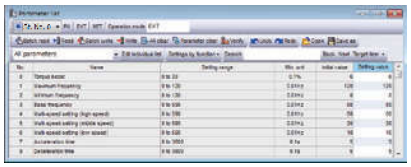

I/O signals can be assigned using settings by function.

Offline auto tuning

Tuning is performed in wizard format after specifying necessary parameter settings.

Batch monitor function

Multiple inverter monitor items can be monitored simultaneously.

With a terminal monitor, the ON/OFF status can be monitored.

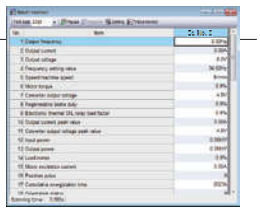

USB memory parameter copy file edit

Parameter settings (USB memory device parameter copy file) read from the inverter to a USB memory device can be edited. With the iQSS backup file conversion function, the files in the backup/restore format generated by the GOT can be converted and edited.

3 Easy-to-follow platform facilitates easy maintenance

Diagnosis (fault history)

Free trial version Supported

Inverter fault history can be read and displayed together with the alarm occurrence time.
Activating faults can be displayed, and inverters can also be reset.

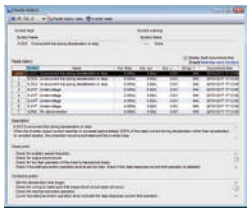

Graph function

Inverter data can be sampled and displayed in a graphical format.
Trace data can also be read and displayed in a graph.

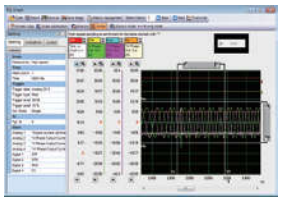

Help

Free trial version Supported

Displays the content of inverter and software Instruction Manuals.

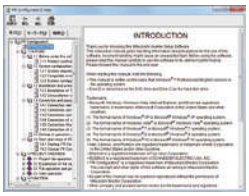

Life diagnosis

Free trial version Supported

Life information read from the inverter is displayed.
Check marks appear in the life alarm fields of inverter parts that have exceeded their replacement schedule.
Diagnosis results can also be output to a file.

Connection Example

Connection example for standard models

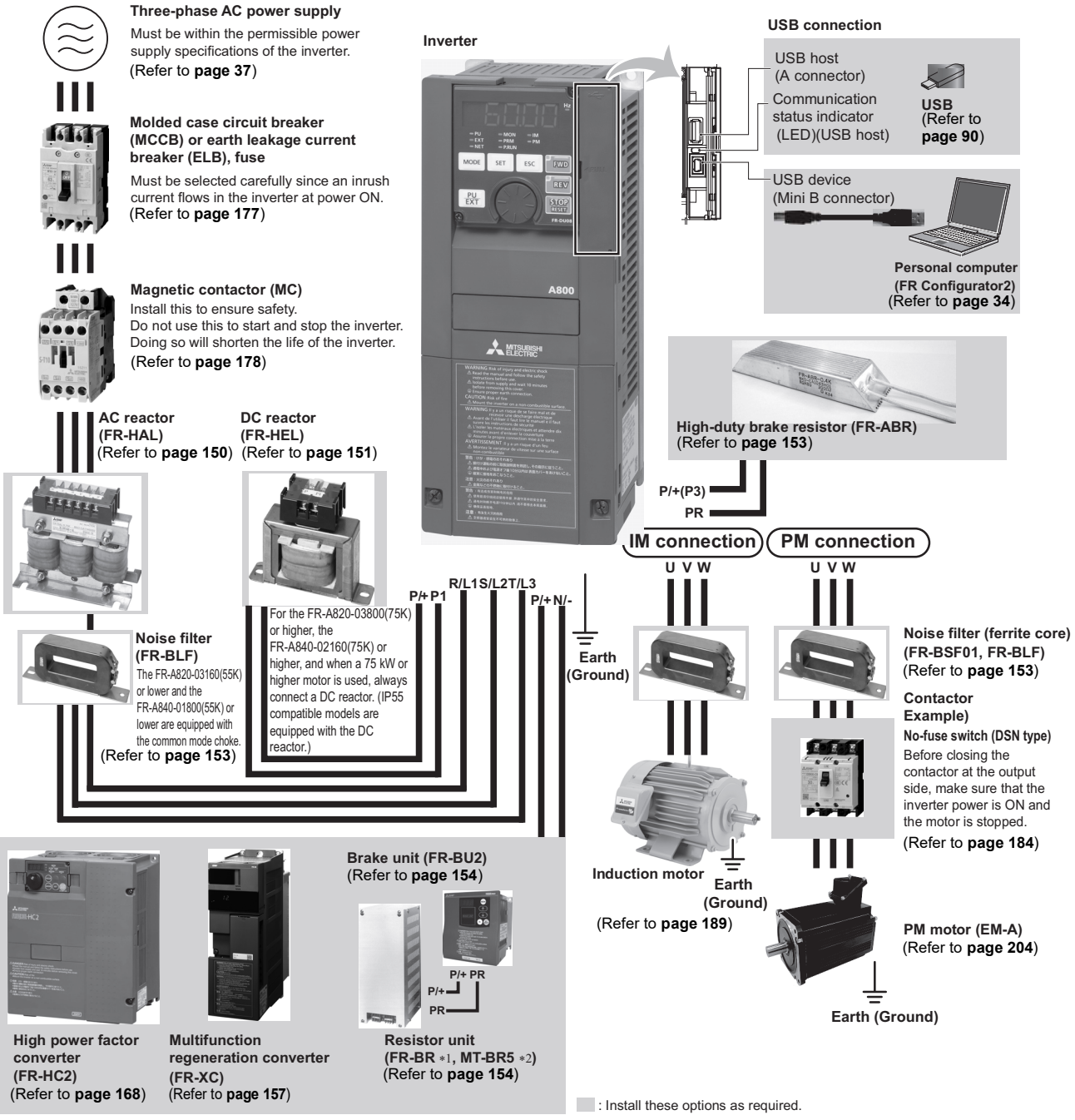

*1 Compatible with the FR-A820-03160(55K) or lower / FR-A840-01800(55K) or lower.
*2 Compatible with the FR-A820-03800(75K) or higher / FR-A840-02160(75K) or higher.

Rating (Standard model)

◆ 200 V class

Model FR-A820-[ ](-E)(-GF)(-GN)(-F)				00046	00077	00105	00167	00250	00340	00490	00630	00770	00930	01250	01540	01870	02330	03160	03800	04750
				0.4K	0.75K	1.5K	2.2K	3.7K	5.5K	7.5K	11K	15K	18.5K	22K	30K	37K	45K	55K	75K	90K
Applicable motor capacity (kW) *1		SLD		0.75	1.5	2.2	3.7	5.5	7.5	11	15	18.5	22	30	37	45	55	75	90/110	132
		LD		0.75	1.5	2.2	3.7	5.5	7.5	11	15	18.5	22	30	37	45	55	75	90	110
		ND (initial setting)		0.4	0.75	1.5	2.2	3.7	5.5	7.5	11	15	18.5	22	30	37	45	55	75	90
		HD		0.2 *2	0.4	0.75	1.5	2.2	3.7	5.5	7.5	11	15	18.5	22	30	37	45	55	75
Output	Rated capacity (kVA) *3	SLD		1.8	2.9	4	6.4	10	13	19	24	29	35	48	59	71	89	120	145	181
		LD		1.6	2.7	3.7	5.8	8.8	12	17	22	27	32	43	53	65	81	110	132	165
		ND (initial setting)		1.1	1.9	3	4.2	6.7	9.1	13	18	23	29	34	44	55	67	82	110	132
		HD		0.6	1.1	1.9	3	4.2	6.7	9.1	13	18	23	29	34	44	55	67	82	110
	Rated current (A)	SLD		4.6	7.7	10.5	16.7	25	34	49	63	77	93	125	154	187	233	316	380	475
		LD		4.2	7	9.6	15.2	23	31	45	58	70.5	85	114	140	170	212	288	346	432
		ND (initial setting)		3	5	8	11	17.5	24	33	46	61	76	90	115	145	175	215	288	346
		HD		1.5	3	5	8	11	17.5	24	33	46	61	76	90	115	145	175	215	288
	Overload current rating *4	SLD		110% 60 s, 120% 3 s (inverse-time characteristics) at surrounding air temperature of 40°C																
		LD		120% 60 s, 150% 3 s (inverse-time characteristics) at surrounding air temperature of 50°C																
		ND (initial setting)		150% 60 s, 200% 3 s (inverse-time characteristics) at surrounding air temperature of 50°C																
		HD		200% 60 s, 250% 3 s (inverse-time characteristics) at surrounding air temperature of 50°C																
	Rated voltage *5			Three-phase 200 to 240 V																
	Regenerative braking	Brake transistor		Built-in											FR-BU2 (Option)					
		Maximum brake torque *7		150% torque/3%ED *6			100% torque/3%ED *6		100% torque/2%ED *6		20% torque/continuous								10% torque/continuous	
		FR-ABR (when the option is used)		150% torque/10%ED		100% torque/10%ED					100% torque/6%ED				—	—	—	—	—	—
Power supply	Rated input AC voltage/frequency			Three-phase 200 to 240 V 50 Hz/60 Hz																
	Permissible AC voltage fluctuation			170 to 264 V 50 Hz/60 Hz																
	Permissible frequency fluctuation			±5%																
	Rated input current (A) *8	Without DC reactor	SLD	5.3	8.9	13.2	19.7	31.3	45.1	62.8	80.6	96.7	115	151	185	221	269	—	—	—
			LD	5	8.3	12.2	18.3	28.5	41.6	58.2	74.8	90.9	106	139	178	207	255	—	—	—
			ND (initial setting)	3.9	6.3	10.6	14.1	22.6	33.4	44.2	60.9	80	96.3	113	150	181	216	266	—	—
			HD	2.3	3.9	6.3	10.6	14.1	22.6	33.4	44.2	60.9	80	96.3	113	150	181	216	—	—
		With DC reactor	SLD	4.6	7.7	10.5	16.7	25	34	49	63	77	93	125	154	187	233	316	380	475
			LD	4.2	7	9.6	15.2	23	31	45	58	70.5	85	114	140	170	212	288	346	432
			ND (initial setting)	3	5	8	11	17.5	24	33	46	61	76	90	115	145	175	215	288	346
			HD	1.5	3	5	8	11	17.5	24	33	46	61	76	90	115	145	175	215	288
	Power supply capacity (kVA) *9	Without DC reactor	SLD	2	3.4	5	7.5	12	17	24	31	37	44	58	70	84	103	—	—	—
			LD	1.9	3.2	4.7	7	11	16	22	29	35	41	53	68	79	97	—	—	—
			ND (initial setting)	1.5	2.4	4	5.4	8.6	13	17	23	30	37	43	57	69	82	101	—	—
			HD	0.9	1.5	2.4	4	5.4	8.6	13	17	23	30	37	43	57	69	82	—	—
		With DC reactor	SLD	1.8	2.9	4	6.4	10	13	19	24	29	35	48	59	71	89	120	145	181
			LD	1.6	2.7	3.7	5.8	8.8	12	17	22	27	32	43	53	65	81	110	132	165
			ND (initial setting)	1.1	1.9	3	4.2	6.7	9.1	13	18	23	29	34	44	55	67	82	110	132
			HD	0.6	1.1	1.9	3	4.2	6.7	9.1	13	18	23	29	34	44	55	67	82	110
Protective structure (IEC 60529) *10				Enclosed type (IP20)											Open type (IP00)					
Cooling system				Self-cooling		Forced air cooling														
Approx. mass (kg)				2.0	2.2	3.4	3.4	3.4	6.7	6.7	8.3	15.5	15.5	15.5	22	42	42	54	74	74

*1 The applicable motor capacity indicated is the maximum capacity applicable for use of the Mitsubishi Electric 4-pole standard motor.
*2 The 0.2 kW motor capacity is applicable under V/F control only.
*3 The rated output capacity indicated assumes that the output voltage is 220 V.
*4 The % value of the overload current rating indicated is the ratio of the overload current to the inverter's rated output current. For repeated duty, allow time for the inverter and motor to return to or below the temperatures under 100% load.
*5 The maximum output voltage does not exceed the power supply voltage. The maximum output voltage can be changed within the setting range. However, the maximum point of the voltage waveform at the inverter output side is the power supply voltage multiplied by about $\sqrt{2}$.
*6 Value for the built-in brake resistor
*7 Value for the ND rating
*8 The rated input current indicates a value at a rated output voltage. The impedance at the power supply side (including those of the input reactor and cables) affects the rated input current.
*9 The power supply capacity is the value when at the rated output current. It varies by the impedance at the power supply side (including those of the input reactor and cables).
*10 FR-DU08: IP40 (except for the PU connector section)

◆ 400 V class

Model FR-A840-[ ](-E)(-GF)(-GN)(-F)				00023	00038	00052	00083	00126	00170	00250	00310	00380	00470	00620	00770	00930	01160	01800	02160	02600	03250	03610	04320	04810	05470	06100	06830
				0.4K	0.75K	1.5K	2.2K	3.7K	5.5K	7.5K	11K	15K	18.5K	22K	30K	37K	45K	55K	75K	90K	110K	132K	160K	185K	220K	250K	280K
Applicable motor capacity (kW) *1		SLD		0.75	1.5	2.2	3.7	5.5	7.5	11	15	18.5	22	30	37	45	55	75/90	110	132	160	185	220	250	280	315	355
		LD		0.75	1.5	2.2	3.7	5.5	7.5	11	15	18.5	22	30	37	45	55	75	90	110	132	160	185	220	250	280	315
		ND (initial setting)		0.4	0.75	1.5	2.2	3.7	5.5	7.5	11	15	18.5	22	30	37	45	55	75	90	110	132	160	185	220	250	280
		HD		0.2*2	0.4	0.75	1.5	2.2	3.7	5.5	7.5	11	15	18.5	22	30	37	45	55	75	90	110	132	160	185	220	250
Output	Rated capacity (kVA) *3	SLD		1.8	2.9	4	6.3	10	13	19	24	29	36	47	59	71	88	137	165	198	248	275	329	367	417	465	521
		LD		1.6	2.7	3.7	5.8	8.8	12	18	22	27	33	43	53	65	81	110	137	165	198	248	275	329	367	417	465
		ND (initial setting)		1.1	1.9	3	4.6	6.9	9.1	13	18	24	29	34	43	54	66	84	110	137	165	198	248	275	329	367	417
		HD		0.6	1.1	1.9	3	4.6	6.9	9.1	13	18	24	29	34	43	54	66	84	110	137	165	198	248	275	329	367
	Rated current (A)	SLD		2.3	3.8	5.2	8.3	12.6	17	25	31	38	47	62	77	93	116	180	216	260	325	361	432	481	547	610	683
		LD		2.1	3.5	4.8	7.6	11.5	16	23	29	35	43	57	70	85	106	144	180	216	260	325	361	432	481	547	610
		ND (initial setting)		1.5	2.5	4	6	9	12	17	23	31	38	44	57	71	86	110	144	180	216	260	325	361	432	481	547
		HD		0.8	1.5	2.5	4	6	9	12	17	23	31	38	44	57	71	86	110	144	180	216	260	325	361	432	481
	Overload current rating *4	SLD		110% 60 s, 120% 3 s (inverse-time characteristics) at surrounding air temperature of 40°C																							
		LD		120% 60 s, 150% 3 s (inverse-time characteristics) at surrounding air temperature of 50°C																							
		ND (initial setting)		150% 60 s, 200% 3 s (inverse-time characteristics) at surrounding air temperature of 50°C																							
		HD		200% 60 s, 250% 3 s (inverse-time characteristics) at surrounding air temperature of 50°C																							
	Rated voltage *5			Three-phase 380 to 500 V																							
	Regenerative braking	Brake transistor		Built-in															FR-BU2(Option)								
		Maximum brake torque *7		100% torque/2%ED *6							20% torque/continuous								10% torque/continuous								
		FR-ABR (when the option is used)		100% torque/10%ED							100% torque/6%ED				— *12				—	—	—	—	—	—	—	—	—
Power supply	Rated input AC voltage/frequency			Three-phase 380 to 500 V 50 Hz/60 Hz *11																							
	Permissible AC voltage fluctuation			323 to 550 V 50 Hz/60 Hz																							
	Permissible frequency fluctuation			±5%																							
	Rated input current (A) *8	Without DC reactor	SLD	3.2	5.4	7.8	10.9	16.4	22.5	31.7	40.3	48.2	58.4	76.8	97.6	115	141	—	—	—	—	—	—	—	—	—	—
			LD	3	4.9	7.3	10.1	15.1	22.3	31	38.2	44.9	53.9	75.1	89.7	106	130	—	—	—	—	—	—	—	—	—	—
			ND (initial setting)	2.3	3.7	6.2	8.3	12.3	17.4	22.5	31	40.3	48.2	56.5	75.1	91	108	134	—	—	—	—	—	—	—	—	—
			HD	1.4	2.3	3.7	6.2	8.3	12.3	17.4	22.5	31	40.3	48.2	56.5	75.1	91	108	—	—	—	—	—	—	—	—	—
		With DC reactor	SLD	2.3	3.8	5.2	8.3	12.6	17	25	31	38	47	62	77	93	116	180	216	260	325	361	432	481	547	610	683
			LD	2.1	3.5	4.8	7.6	11.5	16	23	29	35	43	57	70	85	106	144	180	216	260	325	361	432	481	547	610
			ND (initial setting)	1.5	2.5	4	6	9	12	17	23	31	38	44	57	71	86	110	144	180	216	260	325	361	432	481	547
			HD	0.8	1.5	2.5	4	6	9	12	17	23	31	38	44	57	71	86	110	144	180	216	260	325	361	432	481
	Power supply capacity (kVA) *9	Without DC reactor	SLD	2.5	4.1	5.9	8.3	12	17	24	31	37	44	59	74	88	107	—	—	—	—	—	—	—	—	—	—
			LD	2.3	3.7	5.5	7.7	12	17	24	29	34	41	57	68	81	99	—	—	—	—	—	—	—	—	—	—
			ND (initial setting)	1.7	2.8	4.7	6.3	9.4	13	17	24	31	37	43	57	69	83	102	—	—	—	—	—	—	—	—	—
			HD	1.1	1.7	2.8	4.7	6.3	9.4	13	17	24	31	37	43	57	69	83	—	—	—	—	—	—	—	—	—
		With DC reactor	SLD	1.8	2.9	4	6.3	10	13	19	24	29	36	47	59	71	88	137	165	198	248	275	329	367	417	465	521
			LD	1.6	2.7	3.7	5.8	8.8	12	18	22	27	33	43	53	65	81	110	137	165	198	248	275	329	367	417	465
			ND (initial setting)	1.1	1.9	3	4.6	6.9	9.1	13	18	24	29	34	43	54	66	84	110	137	165	198	248	275	329	367	417
			HD	0.6	1.1	1.9	3	4.6	6.9	9.1	13	18	24	29	34	43	54	66	84	110	137	165	198	248	275	329	367
Protective structure (IEC 60529) *10				Enclosed type (IP20)											Open type (IP00)												
Cooling system				Self-cooling			Forced air cooling																				
Approx. mass (kg)				3.0	3.0	3.0	3.4	3.4	6.7	6.7	8.3	8.3	15	15	23	41	41	43	52	55	71	78	117	117	166	166	166

*1 The applicable motor capacity indicated is the maximum capacity applicable for use of the Mitsubishi Electric 4-pole standard motor.
*2 The 0.2 kW motor capacity is applicable under V/F control only.
*3 The rated output capacity indicated assumes that the output voltage is 440 V.
*4 The % value of the overload current rating indicated is the ratio of the overload current to the inverter's rated output current. For repeated duty, allow time for the inverter and motor to return to or below the temperatures under 100% load.
*5 The maximum output voltage does not exceed the power supply voltage. The maximum output voltage can be changed within the setting range. However, the maximum point of the voltage waveform at the inverter output side is the power supply voltage multiplied by about $\sqrt{2}$.
*6 Value for the built-in brake resistor
*7 Value for the ND rating
*8 The rated input current indicates a value at a rated output voltage. The impedance at the power supply side (including those of the input reactor and cables) affects the rated input current.
*9 The power supply capacity is the value when at the rated output current. It varies by the impedance at the power supply side (including those of the input reactor and cables).
*10 FR-DU08: IP40 (except for the PU connector section)
*11 For the power voltage exceeding 480 V, set **Pr.977 Input voltage mode selection**.
*12 The regenerative braking capability of the inverter can be improved with a commercial brake resistor. For the details, please contact your sales representative.

Rating (Separated converter types)

◆ 400 V class (Standard type)

• Inverter

Model FR-A842-[ ](-E)(-GF)(-GN)(-F)			07700	08660	09620	10940	12120
			315K	355K	400K	450K	500K
Applicable motor capacity (kW) *1		SLD	400	450	500	560	630
		LD	355	400	450	500	560
		ND (initial setting)	315	355	400	450	500
		HD	280	315	355	400	450
Output	Rated capacity (kVA) *2	SLD	587	660	733	834	924
		LD	521	587	660	733	834
		ND (initial setting)	465	521	587	660	733
		HD	417	465	521	587	660
	Rated current (A)	SLD	770	866	962	1094	1212
		LD	683	770	866	962	1094
		ND (initial setting)	610	683	770	866	962
		HD	547	610	683	770	866
	Overload current rating *3	SLD	110% 60 s, 120% 3 s (inverse-time characteristics) at surrounding air temperature of 40°C				
		LD	120% 60 s, 150% 3 s (inverse-time characteristics) at surrounding air temperature of 50°C				
		ND (initial setting)	150% 60 s, 200% 3 s (inverse-time characteristics) at surrounding air temperature of 50°C				
		HD	200% 60 s, 250% 3 s (inverse-time characteristics) at surrounding air temperature of 50°C				
	Rated voltage *4		Three-phase 380 to 500 V				
	Regenerative braking torque *5 (When the converter unit (FR-CC2) is used)	Maximum brake torque	10% torque/continuous				
Input power	DC power supply voltage		430 to 780 VDC				
	Control power supply auxiliary input		Single phase 380 to 500 V 50 Hz/60 Hz *7				
	Permissible control power supply auxiliary input fluctuation		Frequency ±5%, voltage ±10%				
Protective structure (IEC 60529) *6			Open type (IP00)				
Cooling system			Forced air cooling				
Approx. mass (kg)			163	163	243	243	243

*1 The applicable motor capacity indicated is the maximum capacity applicable for use of the Mitsubishi Electric 4-pole standard motor.
*2 The rated output capacity indicated assumes that the output voltage is 440 V.
*3 The % value of the overload current rating indicated is the ratio of the overload current to the inverter's rated output current. For repeated duty, allow time for the inverter and motor to return to or below the temperatures under 100% load.
*4 The maximum output voltage does not exceed the power supply voltage. The maximum output voltage can be changed within the setting range. However, the maximum point of the voltage waveform at the inverter output side is the power supply voltage multiplied by about $\sqrt{2}$.
*5 ND rating reference value
*6 FR-DU08: IP40 (except for the PU connector section)
*7 For the power voltage exceeding 480 V, set **Pr.977 Input voltage mode selection**.

• Converter unit (FR-CC2)

Model FR-CC2-H[ ]		315K	355K	400K	450K	500K	560K	630K
Applicable motor capacity (kW)		315	355	400	450	500	560	630
Output	Overload current rating *1	200% 60 s, 250% 3 s				150% 60 s, 200% 3 s	120% 60 s, 150% 3 s	110% 60 s, 120% 3 s
	Rated voltage *2	430 to 780 VDC *4						
Power supply	Rated input AC voltage/frequency	Three-phase 380 to 500 V 50 Hz/60 Hz						
	Permissible AC voltage fluctuation	Three-phase 323 to 550 V 50 Hz/60 Hz						
	Permissible frequency fluctuation	±5%						
	Rated input current (A)	610	683	770	866	962	1094	1212
	Power supply capacity (kVA) *3	465	521	587	660	733	833	924
Protective structure (IEC 60529)		Open type (IP00)						
Cooling system		Forced air cooling						
DC reactor		Built-in						
Approx. mass (kg)		210	213	282	285	288	293	294

*1 The % value of the overload current rating indicated is the ratio of the overload current to the inverter's rated output current. For repeated duty, allow time for the converter unit and the inverter to return to or below the temperatures under 100% load.
*2 The converter unit output voltage varies according to the input power supply voltage and the load. The maximum point of the voltage waveform at the converter unit output side is approximately the power supply voltage multiplied by $\sqrt{2}$.
*3 The power supply capacity is the value when at the rated output current. It varies by the impedance at the power supply side (including those of the input reactor and cables).
*4 The permissible voltage imbalance ratio is 3% or less. (Imbalance ratio = (highest voltage between lines - average voltage between three lines) / average voltage between three lines × 100)

◆ 400 V class (parallel operation function compatible model)

• Inverter

Model FR-A842-[ ]-P			Two in parallel			Three in parallel		
			400K	450K	500K	400K	450K	500K
			09620	10940	12120	09620	10940	12120
Applicable motor capacity (kW)		LD	710	800	900	1065	1200	1350
		ND (initial setting)	630	710	800	945	1065	1200
Output	Rated capacity (kVA) *1	LD	1056	1173	1334	1584	1759	2002
		ND (initial setting)	939	1056	1173	1409	1584	1759
	Rated current (A) *2	LD	1386	1539	1750	2078	2309	2626
		ND (initial setting)	1232	1386	1539	1848	2078	2309
	Overload current rating *3	LD	120% 60 s, 150% 3 s (inverse-time characteristics) at surrounding air temperature of 50°C					
		ND (initial setting)	150% 60 s, 200% 3 s (inverse-time characteristics) at surrounding air temperature of 50°C					
	Rated voltage *4		Three-phase 380 to 500 V					
	Regenerative braking torque *5 (When the converter unit is used)	Maximum brake torque	10% torque/continuous					
Input power	DC power supply voltage		430 to 780 VDC					
	Control power supply auxiliary input		Single phase 380 to 500 V 50/60 Hz *6					
	Permissible control power supply auxiliary input fluctuation		Frequency ±5%, voltage ±10%					
Protective structure (IEC 60529) *7			Open type (IP00)					
Cooling system			Forced air cooling					
Approx. mass (kg) *8			486	486	486	729	729	729

*1 The rated output capacity indicated assumes that the output voltage is 440 V.
*2 Total output current of the inverters operated in parallel.
*3 The % value of the overload current rating indicated is the ratio of the overload current to the inverter's rated output current. For repeated duty, allow time for the inverter and motor to return to or below the temperatures under 100% load.
*4 The maximum output voltage does not exceed the power supply voltage. The maximum output voltage can be changed within the setting range. However, the maximum point of the voltage waveform at the inverter output side is the power supply voltage multiplied by about $\sqrt{2}$.
*5 ND rating reference value.
*6 For the power voltage exceeding 480 V, set **Pr.977 Input voltage mode selection**.
*7 FR-DU08: IP40 (except for the PU connector section)
*8 Total mass of the inverters operated in parallel.

• Converter unit (FR-CC2)

Model FR-CC2-H[]-P		Two in parallel				Three in parallel			
		400K	450K	500K	560K	400K	450K	500K	560K
Applicable motor capacity (kW)		630	710	800	900	945	1065	1200	1350
Output	Overload current rating *1	150% 60 s, 200% 3 s							
	Rated voltage *2	430 to 780 VDC *3							
Power supply	Rated input AC voltage/frequency	Three-phase 380 to 500 V 50/60 Hz							
	Permissible AC voltage fluctuation	Three-phase 323 to 550 V 50/60 Hz							
	Permissible frequency fluctuation	±5%							
	Rated input current (A) *4	1232	1386	1539	1750	1848	2078	2309	2626
	Power supply capacity (kVA) *5	939	1056	1173	1334	1409	1584	1759	2002
Protective structure (IEC 60529)		Open type (IP00)							
Cooling system		Forced air cooling							
DC reactor		Built-in							
Approx. mass (kg) *6		564	570	576	586	846	855	864	879

*1 The % value of the overload current rating indicated is the ratio of the overload current to the inverter's rated output current. For repeated duty, allow time for the converter unit and the inverter to return to or below the temperatures under 100% load.
*2 The converter unit output voltage varies according to the input power supply voltage and the load. The maximum point of the voltage waveform at the converter unit output side is approximately the power supply voltage multiplied by $\sqrt{2}$.
*3 The permissible voltage imbalance ratio is 3% or less. (Imbalance ratio = (highest voltage between lines - average voltage between three lines) / average voltage between three lines × 100)
*4 The input current is the total current of the master and slave converter units during the parallel operation.
*5 The power supply capacity is the value when at the rated output current. It varies by the impedance at the power supply side (including those of the input reactor and cables).
*6 The mass is the total mass of the master and slave converter units during the parallel operation.

Rating (IP55 compatible model)

◆ 400 V class

Model FR-A846-[ ](-E)			00023	00038	00052	00083	00126	00170	00250	00310	00380	00470	00620	00770	00930	01160	01800	02160	02600	03250	03610
			0.4K	0.75K	1.5K	2.2K	3.7K	5.5K	7.5K	11K	15K	18.5K	22K	30K	37K	45K	55K	75K	90K	110K	132K
Applicable motor capacity (kW) *1		LD	0.75	1.5	2.2	3.7	5.5	7.5	11	15	18.5	22	30	37	45	55	75	90	110	132	160
		ND (initial setting)	0.4	0.75	1.5	2.2	3.7	5.5	7.5	11	15	18.5	22	30	37	45	55	75	90	110	132
Output	Rated capacity (kVA) *2	LD	1.6	2.7	3.7	5.8	8.8	12	18	22	27	33	43	53	65	81	110	137	165	198	248
		ND (initial setting)	1.1	1.9	3	4.6	6.9	9.1	13	18	24	29	34	43	54	66	84	110	137	165	198
	Rated current (A)	LD	2.1	3.5	4.8	7.6	11.5	16	23	29	35	43	57	70	85	106	144	180	216	260	325
		ND (initial setting)	1.5	2.5	4	6	9	12	17	23	31	38	44	57	71	86	110	144	180	216	260
	Overload current rating *3	LD	120% 60 s, 150% 3 s (inverse-time characteristics) at surrounding air temperature of 40°C																		
		ND (initial setting)	150% 60 s, 200% 3 s (inverse-time characteristics) at surrounding air temperature of 40°C																		
	Rated voltage *4		Three-phase 380 to 500 V																		
	Regenerative braking	Maximum brake torque *5	10% torque/continuous																		
Power supply	Rated input AC voltage/frequency		Three-phase 380 to 500 V 50 Hz/60 Hz *8																		
	Permissible AC voltage fluctuation		323 to 550 V 50 Hz/60 Hz																		
	Permissible frequency fluctuation		±5%																		
	Rated input current (A) *6	LD	2.1	3.5	4.8	7.6	11.5	16	23	29	35	43	57	70	85	106	144	180	216	260	325
		ND (initial setting)	1.5	2.5	4	6	9	12	17	23	31	38	44	57	71	86	110	144	180	216	260
	Power supply capacity (kVA) *7	LD	1.6	2.7	3.7	5.8	9	12	18	22	27	33	43	53	65	81	110	137	165	198	248
		ND (initial setting)	1.1	1.9	3	4.6	6.9	9	13	18	24	29	34	43	54	66	102	110	137	165	198
Protective structure		IEC 60529	Dust- and water-proof type (IP55) *10																		
		UL50	UL Type12 *9																		
Cooling system			Self cooling + internal fan						Forced-air-cooling + internal fan												
DC reactor			Built-in																		
Approx. mass (kg)			15	15	15	15	16	17	26	26	27	27	59	60	63	64	147	150	153	189	193

*1 The applicable motor capacity indicated is the maximum capacity applicable for use of the Mitsubishi Electric 4-pole standard motor.

*2 The rated output capacity indicated assumes that the output voltage is 440 V.

*3 The % value of the overload current rating indicated is the ratio of the overload current to the inverter's rated output current. For repeated duty, allow time for the inverter and motor to return to or below the temperatures under 100% load.

*4 The maximum output voltage does not exceed the power supply voltage. The maximum output voltage can be changed within the setting range. However, the maximum point of the voltage waveform at the inverter output side is the power supply voltage multiplied by about $\sqrt{2}$.

*5 Value for the ND rating.

*6 The rated input current indicates a value at a rated output voltage. The impedance at the power supply side (including those of the input reactor and cables) affects the rated input current.

*7 The power supply capacity is the value when at the rated output current. It varies by the impedance at the power supply side (including those of the input reactor and cables).

*8 For the power voltage exceeding 480 V, set **Pr.977 Input voltage mode selection**.

*9 UL Type 12 Enclosure-Suitable for Installation in a Compartment Handling Conditioned Air (Plenum)

*10 For compliance with IP55, remove the protective bushes and install the recommended cable glands.

Rating (Slim model)

◆ 400 V class

Model FR-A840M-[]			03630	04540
			160K	200K
Applicable motor capacity (kW) *1		SLD	200	250
		ND (initial setting)	160	200
Output	Rated capacity (kVA) *2	SLD	200	250
		ND (initial setting)	160	200
	Rated current (A)	SLD	363	454
		ND (initial setting)	293	363
	Overload current rating *3	SLD	110% 60 s, 120% 3 s (inverse-time characteristics) at surrounding air temperature of 40°C	
		ND (initial setting)	150% 60 s, 200% 3 s (inverse-time characteristics) at surrounding air temperature of 40°C	
	Rated voltage *4		Three-phase 380 to 500 V	
	Regenerative braking	Brake transistor	Built-in (Built-in brake transistor model only.)	
		Maximum brake torque *6	100% torque *5	
Power supply	Rated input AC voltage/frequency		Three-phase 380 to 500 V, 50/60 Hz *10	
	Permissible AC voltage fluctuation		323 to 550 V, 50/60 Hz	
	Permissible frequency fluctuation		±5%	
	Rated input current (A) *7	SLD	363	454
		ND (initial setting)	293	363
	Power supply capacity (kVA) *8	SLD	277	346
		ND (initial setting)	223	277
Protection rating of structure (IEC 60529) *9			IP20 (IP55 between internal and external air regions)	
Cooling system			Forced air	
Noise level (dB) *11			73.4	73.4
Approx. mass (kg)			148	148

*1 The applicable motor capacity indicated is the maximum capacity applicable for use of the Mitsubishi Electric 4-pole standard motor.
*2 The rated output capacity is the value with respect to 440 V output voltage.
*3 The percentage of the overload current rating is the ratio of the overload current to the inverter's rated output current. For repeated duty, allow time for the inverter and motor to return to or below the temperatures under 100% load.
*4 The maximum output voltage does not exceed the power supply voltage. The maximum output voltage can be changed within the setting range. However, the maximum point of the voltage waveform at the inverter output side is the power supply voltage multiplied by about $\sqrt{2}$.
*5 The value when a commercially-available brake resistor is used. (Set the value of %ED in **Pr.70 Special regenerative brake duty**.)
*6 Value for the ND rating
*7 The rated input current is the value at a rated output voltage. The input power impedances (including those of the input reactor and cables) affect the value.
*8 The power supply capacity is the value at the rated output current. The input power impedances (including those of the input reactor and cables) affect the value.
*9 FR-DU08: IP40 (except for the PU connector)
*10 For the power voltage exceeding 480 V, set **Pr.977 Input voltage mode selection**.
*11 Values measured 1 m in front of the inverter and 1.6 m from the floor.

Rating (Slim model) (Separated converter types)

◆ 400 V class

• Inverter

Model FR-A842M-[]			05080	05720	06440	07260	08170	09080	10160
			250K	280K	315K	355K	400K	450K	500K
Applicable motor capacity (kW)*1		SLD	280	315	355	400	450	500	560
		ND (initial setting)	250	280	315	355	400	450	500
Output	Rated capacity (kVA)*2	SLD	387	436	491	553	623	692	774
		ND (initial setting)	351	387	436	491	553	623	692
	Rated current (A)*3	SLD	508	572	644	726	817	908	1016
		ND (initial setting)	454	508	572	644	726	817	908
	Overload current rating*4	SLD	110% 60 s (inverse-time characteristics) at surrounding air temperature of 40°C						
		ND (initial setting)	150% 60 s (inverse-time characteristics) at surrounding air temperature of 40°C						
	Rated voltage*5		Three-phase 380 to 500 V						
	Regenerative braking torque*6 (when used with the converter unit (FR-CC2M))	Brake transistor	Built-in (Built-in brake transistor model only)			FR-BU2 (option)			
		Maximum brake torque	10% torque, continuous						
Input power	Power supply voltage		430 to 780 VDC						
	Control circuit power supply auxiliary input		Single-phase 380 to 500 V, 50/60 Hz*7						
	Permissible control circuit power supply auxiliary input fluctuation		Frequency ±5%, voltage ±10%						
Protective structure			Open type IP20 (for IEC 60529 only)*8						
Cooling system			Forced air						
Noise level (dB)*9			73.5	73.5	73.5	81.8	81.8	84.4	84.4
Approx. mass (kg)*10			125 (130)	125 (130)	125 (130)	155	155	180	180

*1 The applicable motor capacity indicated is the maximum capacity applicable for use of the Mitsubishi Electric standard 4-pole motor.
*2 The rated output capacity is the value with respect to 440 V output voltage.
*3 Possible output currents during continuous operation under Real sensorless vector control, Vector control, or PM sensorless vector control are shown in the following tables.
The PWM carrier frequency is automatically decreased to 2 kHz for heavy duty applications when operating the motor under Real sensorless vector control, Vector control, or PM sensorless vector control with a PWM carrier frequency of more than 6 kHz (**Pr.72** ≥ 6). The carrier frequency stays at 4 kHz in fast-response operation.
When the carrier frequency is 2 kHz, the SLD rated current value is about 83% of the ND rated value.

PWM carrier frequency	05080		05720		06440		07260	
	SLD	ND	SLD	ND	SLD	ND	SLD	ND
2 kHz	421 A	454 A	474 A	508 A	534 A	572 A	602 A	644 A
4 kHz, 6 kHz	254 A	227 A	286 A	254 A	322 A	286 A	363 A	322 A

PWM carrier frequency	08170		09080		10160	
	SLD	ND	SLD	ND	SLD	ND
2 kHz	678 A	726 A	753 A	817 A	843 A	908 A
4 kHz, 6 kHz	408 A	363 A	454 A	408 A	508 A	454 A

*4 The percentage of the overload current rating is the ratio of the overload current to the inverter's rated output current. For repeated duty, allow time for the inverter and motor to return to or below the temperatures under 100% load.
*5 The maximum output voltage does not exceed the power supply voltage. The maximum output voltage can be changed within the setting range. However, the maximum point of the voltage waveform at the inverter output side is the power supply voltage multiplied by about $\sqrt{2}$.
*6 Value for the ND rating
*7 For the power voltage exceeding 480 V, set **Pr.977 Input voltage mode selection**.
*8 FR-DU08: IP40 (except for the PU connector)
*9 Values measured 1 m in front of the inverter and 1.6 m from the floor.
*10 The value in the parentheses is the approx. mass of the built-in brake transistor model.

• Converter unit (FR-CC2M)

Model FR-CC2M-H[](12P)		250K	280K	315K	355K	400K	450K	500K	560K
Applicable motor capacity (kW)		250	280	315	355	400	450	500	560
Output	Overload current rating*1	150% 60 s							110% 60 s
	Rated voltage*2	430 to 780 VDC*4							
Power supply	Rated input AC voltage/frequency	Three-phase 380 to 500 V, 50/60 Hz							
	Permissible AC voltage fluctuation	Three-phase 323 to 550 V, 50/60 Hz							
	Permissible frequency fluctuation	±5%							
	Rated input current (A)	454	508	572	644	726	817	908	1016
	Power supply capacity (kVA)*3	351	387	436	491	553	623	692	774
Protective structure		Open type IP20 (for IEC 60529 only)							
Cooling system		Forced air							
DC reactor		Built-in							
Noise level (dB)*5		76.5	76.5	76.5	81.4	81.4	81.4	81.4	81.4
Approx. mass (kg)		125	125	130	190	190	190	200	200

*1 The percentage of the overload current rating is the ratio of the overload current to the inverter's rated output current. For repeated duty, allow time for the converter unit and the inverter to return to or below the temperatures under 100% load.
*2 The converter unit output voltage varies according to the input power supply voltage and the load. The maximum point of the voltage waveform at the converter unit output side is approximately the power supply voltage multiplied by $\sqrt{2}$.
*3 The power supply capacity is the value at the rated output current. The input power impedances (including those of the input reactor and cables) affect the value.
*4 The permissible voltage imbalance ratio is 3% or less. (Imbalance ratio = (highest voltage between lines - average voltage between three lines) / average voltage between three lines × 100)
*5 Values measured 1 m in front of the converter unit and 1.6 m from the floor.

Common specifications

Control specifications	Control method		Soft-PWM control, high carrier frequency PWM control (selectable among V/F control, Advanced magnetic flux vector control, Real sensorless vector control, Optimum excitation control), vector control*1, and PM sensorless vector control
	Output frequency range		0.2 to 590 Hz (The upper-limit frequency is 400 Hz under Advanced magnetic flux vector control, Real sensorless vector control, vector control*1, and PM sensorless vector control.)
	Frequency setting resolution	Analog input	0.015 Hz/60 Hz (0 to 10 V/12 bits for terminals 2 and 4) 0.03 Hz/60 Hz (0 to 5 V/11 bits or 0 to 20 mA/approx. 11 bits for terminals 2 and 4, 0 to ±10 V/12 bits for terminal 1) 0.06 Hz/60 Hz (0 to ±5 V/11 bits for terminal 1)
		Digital input	0.01 Hz
	Frequency accuracy	Analog input	Within ±0.2% of the max. output frequency (25°C ± 10°C)
		Digital input	Within 0.01% of the set output frequency
	Voltage/frequency characteristics		Base frequency can be set from 0 to 590 Hz. Constant-torque/variable-torque pattern or adjustable 5 points V/F can be selected.
	Starting torque *2		SLD rating:120% 0.3 Hz, LD rating:150% 0.3 Hz, ND rating:200% 0.3 Hz*3, HD rating:250% 0.3 Hz*3 (Real sensorless vector control, vector control*1)
	Torque boost		Manual torque boost
	Acceleration/deceleration time setting		0 to 3600 s (acceleration and deceleration can be set individually), linear or S-pattern acceleration/deceleration mode, backlash countermeasures acceleration/deceleration can be selected.
	DC injection brake (induction motor)		Operation frequency (0 to 120 Hz), operation time (0 to 10 s), operation voltage (0 to 30%) variable
	Stall prevention operation level		Activation range of stall prevention operation (SLD rating: 0 to 120%, LD rating: 0 to 150%, ND rating: 0 to 220%, HD rating: 0 to 280%). Whether to use the stall prevention or not can be selected. (V/F control, Advanced magnetic flux vector control)
	Torque limit level		Torque limit value can be set (0 to 400% variable). (Real sensorless vector control, vector control*1, PM sensorless vector control)
Operation specifications	Frequency setting signal	Analog input	Terminals 2 and 4: 0 to 10 V, 0 to 5 V, 4 to 20 mA (0 to 20 mA) are available. Terminal 1: -10 to +10 V, -5 to +5 V are available.
		Digital input	Input using the setting dial of the operation panel or parameter unit Four-digit BCD or 16-bit binary (when used with option FR-A8AX)
	Start signal		Forward and reverse rotation or start signal automatic self-holding input (3-wire input) can be selected.
	Input signals (twelve terminals)		Low-speed operation command, Middle-speed operation command, High-speed operation command, Second function selection, Terminal 4 input selection, Jog operation selection, Selection of automatic restart after instantaneous power failure, flying start, Output stop, Start self-holding selection, Forward rotation command, Reverse rotation command, Inverter reset The input signal can be changed using **Pr.178 to Pr.189 (input terminal function selection)**.
		Pulse train input	100k pulses/s
	Operational functions		Maximum and minimum frequency settings, multi-speed operation, acceleration/deceleration pattern, thermal protection, DC injection brake, starting frequency, JOG operation, output stop (MRS), stall prevention, regeneration avoidance, increased magnetic excitation deceleration, DC feeding*4, frequency jump, rotation display, automatic restart after instantaneous power failure, electronic bypass sequence, remote setting, automatic acceleration/deceleration, retry function, carrier frequency selection, fast-response current limit, forward/reverse rotation prevention, operation mode selection, slip compensation, droop control, load torque high-speed frequency control, speed smoothing control, traverse, auto tuning, applied motor selection, gain tuning, RS-485 communication, Ethernet communication*10, PID control, PID pre-charge function, easy dancer control, cooling fan operation selection, stop selection (deceleration stop/coasting), power-failure deceleration stop function, stop-on-contact control, PLC function, life diagnosis, maintenance timer, current average monitor, multiple rating, orientation control*1, speed control, torque control, position control, pre-excitation, torque limit, test run, 24 V power supply input for control circuit, safety stop function, anti-sway control
	Output signal	Open collector output (five terminals) Relay output (two terminals)	Inverter running, Up to frequency, Instantaneous power failure/undervoltage*4, Overload warning, Output frequency detection, Fault The output signal can be changed using **Pr.190 to Pr.196 (output terminal function selection)**. Fault codes of the inverter can be output (4 bits) from the open collector.
		Pulse train output (FM type)	50k pulses/s
Indication	For meter	Pulse train output (FM type)	Max. 2.4 kHz: one terminal (output frequency) The monitored item can be changed using **Pr.54 FM/CA terminal function selection.**
		Current output (CA type)	Max. 20 mADC: one terminal (output frequency) The monitored item can be changed using **Pr.54 FM/CA terminal function selection.**
		Voltage output	Max. 10 VDC: one terminal (output frequency) The monitored item can be changed using **Pr.158 AM terminal function selection.**
	Operation panel (FR-DU08)	Operating status	Output frequency, Output current, Output voltage, Frequency setting value The monitored item can be changed using **Pr.52 Operation panel main monitor selection**.
		Fault record	A fault record is displayed when a fault occurs. Past 8 fault records and the conditions immediately before the fault (output voltage/current/frequency/cumulative energization time/year/month/date/time) are saved.

Protective/ warning function	Protective function	Overcurrent trip during acceleration, Overcurrent trip during constant speed, Overcurrent trip during deceleration or stop, Regenerative overvoltage trip during acceleration, Regenerative overvoltage trip during constant speed, Regenerative overvoltage trip during deceleration or stop, Inverter overload trip (electronic thermal relay function), Motor overload trip (electronic thermal relay function), Heat sink overheat, Instantaneous power failure*4, Undervoltage*4, Input phase loss*4*5, Stall prevention stop, Loss of synchronism detection*5, Upper limit fault detection, Lower limit fault detection, Brake transistor alarm detection*6, Output side earth (ground) fault overcurrent, Output short circuit, Output phase loss, External thermal relay operation*5, PTC thermistor operation*5, Option fault, Communication option fault, Parameter storage device fault (control board), PU disconnection, Retry count excess*5, Parameter storage device fault (main circuit board), CPU fault, Operation panel power supply short circuit/RS-485 terminals power supply short circuit, 24 VDC power fault, Abnormal output current detection*5, Inrush current limit circuit fault*4, Communication fault, Analog input fault, USB communication fault, Safety circuit fault, Overspeed occurrence*5, Speed deviation excess detection*1*5, Signal loss detection*5, Excessive position fault*1*5, Brake sequence fault*5, Encoder phase fault*1*5, 4 mA input fault*5, Pre-charge fault*5, PID signal fault*5, Ethernet communication fault*10, Opposite rotation deceleration fault*5, Internal circuit fault, Abnormal internal temperature*7, Magnetic pole position unknown*1, Internal storage device fault
	Warning function	Fan alarm, Stall prevention (overcurrent), Stall prevention (overvoltage), Regenerative brake pre-alarm*5*6, Electronic thermal relay function pre-alarm, PU stop, Speed limit indication (output during speed limit)*5, Parameter copy, Safety stop, Maintenance timer 1 to 3*5, USB host error, Home position return setting error*5, Home position return uncompleted*5, Home position return parameter setting error*5, Operation panel lock*5, Password locked*5, Parameter write error, Copy operation error, 24 V external power supply operation, Internal fan alarm*7, Continuous operation during communication fault*5, Load fault warning, Ethernet communication fault*10
Environment	Surrounding air temperature	-10°C to +50°C (0°C to +50°C for the FR-A800-GF) (non-freezing) (LD, ND, HD ratings) -10°C to +40°C (0°C to +40°C for the FR-A800-GF) (non-freezing) (SLD rating, IP55 compatible model)
	Surrounding air humidity	95% RH or less (non-condensing) (With circuit board coating (conforming to IEC60721-3-3:1994 3C2/3S2), IP55 compatible model) 90% RH or less (non-condensing) (Without circuit board coating)
	Storage temperature *8	-20°C to +65°C
	Atmosphere	Indoors (without corrosive gas, flammable gas, oil mist, dust and dirt, etc.)
	Altitude/vibration	2500 m or less (For the installation at an altitude above 1000 m, consider a 3% reduction in the rated current per 500 m increase in altitude.), 5.9 m/s^2 *9 or less at 10 to 55 Hz (directions of X, Y, Z axes)

*1 Available only when a vector control compatible option is installed. (The protective function may or may not be available depending on the type of the connected communication option.)
*2 For PM sensorless vector control, refer to **page 211**.
*3 In the initial setting of the FR-A820-00340(5.5K) or higher and the FR-A840-00170(5.5K) or higher, it is limited to 150% by the torque limit level.
*4 This function is not available in the separated converter type and the slim model (separated converter type).
*5 This protective function is not available in the initial status.
*6 Available for the standard model only. For the slim model (including the separated converter type), the function is available for the built-in brake transistor model only.
*7 Available for the IP55 compatible model only.
*8 Temperature applicable for a short time, e.g. in transit.
*9 2.9 m/s^2 or less for the FR-A840-04320(160K) or higher.
*10 Available for the FR-A800-E only.

● PLC function specifications

Item			A800 PLC function specifications
Control method			Repeated operation (by stored program)
I/O control mode			Refresh
Programming language			Relay symbolic language (ladder) Logic symbolic language Function block
No. of instructions	Sequence instructions		25
	Basic instructions		84
	Application instructions		37
Processing speed			Sequence instructions 1.9 μs to 12 μs/step*1
Number of I/O device points			288 (input: 144 points, output: 144 points) 19 points built-in (input: 12 points, output: 7 points)*2, 12 points built-in (input: 8 points, output: 4 points)*2*3 FR-A8AX (input: 16 points) FR-A8AY (output: 7 points) FR-A8AR (output: 3 points)
Number of analog I/O points			3 input points built-in (Terminals 1, 2, and 4), FR-A8AZ: 1 input point (Terminal 6) 2 output points built-in (Terminals F/C(FM/CA) and AM), FR-A8AY: 2 output points (Terminals AM0 and AM1), FR-A8AZ: 1 output point (Terminal DA1)
Pulse train I/O		Input	Terminal JOG maximum input pulse: 100k pulses/s *4
		Output	Terminal FM maximum output pulse: 50k pulses/s *4
Watchdog timer			10 to 2000 ms
Program capacity			6K steps (24k bytes) (0 to 6144 steps can be set) Contained in one program
Device	Internal relay (M)		128 (M0 to M127)
	Latch relay (L)		Not used (Can be set with parameters but will not latch)*5
	Timer (T)	Number of points	32 (T0 to T31)*6
		Specifications	100 ms timer: 0.1 to 3276.7 s can be set 10 ms timer: 0.01 to 327.67 s can be set
	Retentive timer (ST)	Number of points	0 (up to 32 by parameter assignment)*6
		Specifications	100 ms retentive timer: 0.1 to 3276.7 s can be set 10 ms retentive timer: 0.01 to 327.67 s can be set
	Counter (C)	Number of points	32 (C0 to C31)*6
		Specifications	Normal counter: Setting range 1 to 32767 Interrupt program counter: Not used
	Data register (D)		256 (D0 to D255)
	Special relay (SM)		2048 (SM0 to SM2047) with limited functions
	Special register (SD)		2048 (SD0 to SD2047) with limited functions

*1 The scan time is approximately 40 ms for 1K steps as inverter control is also performed in actual operations.
*2 The signals same as the ones assigned to the inverter I/O terminals are used.
One point is always required for a sequence start (RUN/STOP).
*3 The number of points is changed when the FR-A8TP is installed.
*4 **Pr.291 Pulse train I/O selection** must be set.
*5 There is no device latch function for power failures.
Use the **Pr.1150 to Pr.1199 PLC function user parameters 1 to 50** (D206 to D255) to store device values in the EEPROM.
*6 The number of points differs depending on the model. For details, refer to the PLC Function Programming Manual.

NOTE

- There is no buffer memory.

Outline Dimension Drawings

Standard model

FR-A820-00046(0.4K), FR-A820-00077(0.75K)(-E)(-GF)(-GN)(-F)

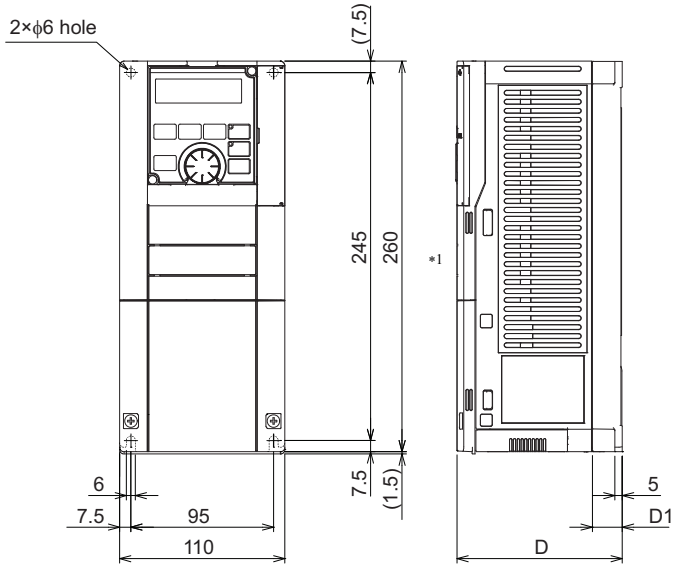

Inverter model	D	D1
FR-A820-00046(0.4K)	110	20
FR-A820-00077(0.75K)	125	35

*1 The LED display cover attached to the FR-A800-GF, FR-A800-GN in this position has an additional 2.1 mm depth.

(Unit: mm)

FR-A820-00105(1.5K), 00167(2.2K), 00250(3.7K)(-E)(-GF)(-GN)(-F)
FR-A840-00023(0.4K), 00038(0.75K), 00052(1.5K), 00083(2.2K), 00126(3.7K)(-E)(-GF)(-GN)(-F)

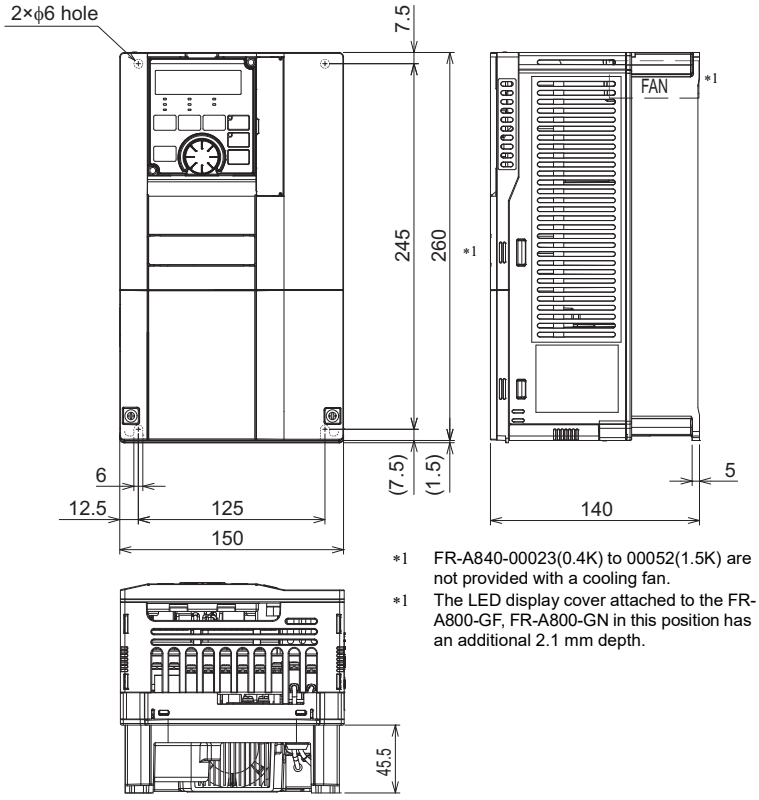

*1 FR-A840-00023(0.4K) to 00052(1.5K) are not provided with a cooling fan.

*1 The LED display cover attached to the FR-A800-GF, FR-A800-GN in this position has an additional 2.1 mm depth.

(Unit: mm)

FR-A820-00340(5.5K), 00490(7.5K), 00630(11K)(-E)(-GF)(-GN)(-F)
FR-A840-00170(5.5K), 00250(7.5K), 00310(11K), 00380(15K)(-E)(-GF)(-GN)(-F)

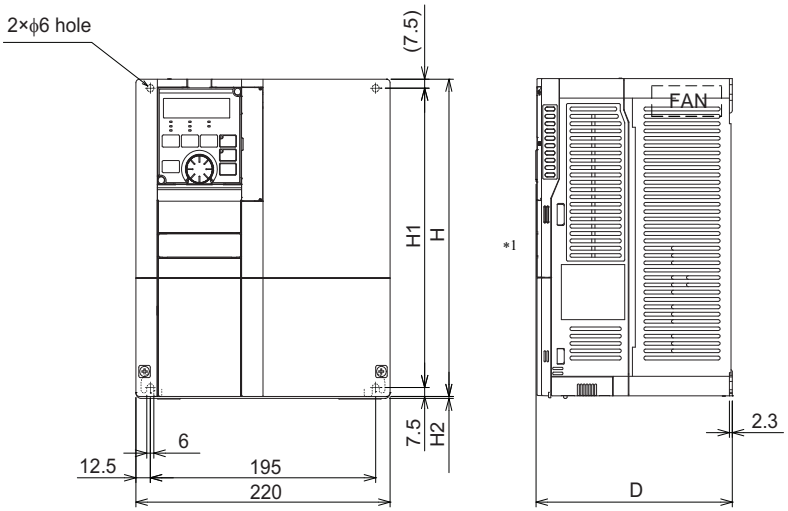

Inverter model	H	H1	H2	D	D1
FR-A820-00340(5.5K), 00490(7.5K) FR-A840-00170(5.5K), 00250(7.5K)	260	245	1.5	170	84
FR-A820-00630(11K) FR-A840-00310(11K), 00380(15K)	300	285	3	190	101.5

*1 The LED display cover attached to the FR-A800-GF, FR-A800-GN in this position has an additional 2.1 mm depth.

(Unit: mm)

FR-A820-00770(15K), 00930(18.5K), 01250(22K)(-E)(-GF)(-GN)(-F)
FR-A840-00470(18.5K), 00620(22K)(-E)(-GF)(-GN)(-F)

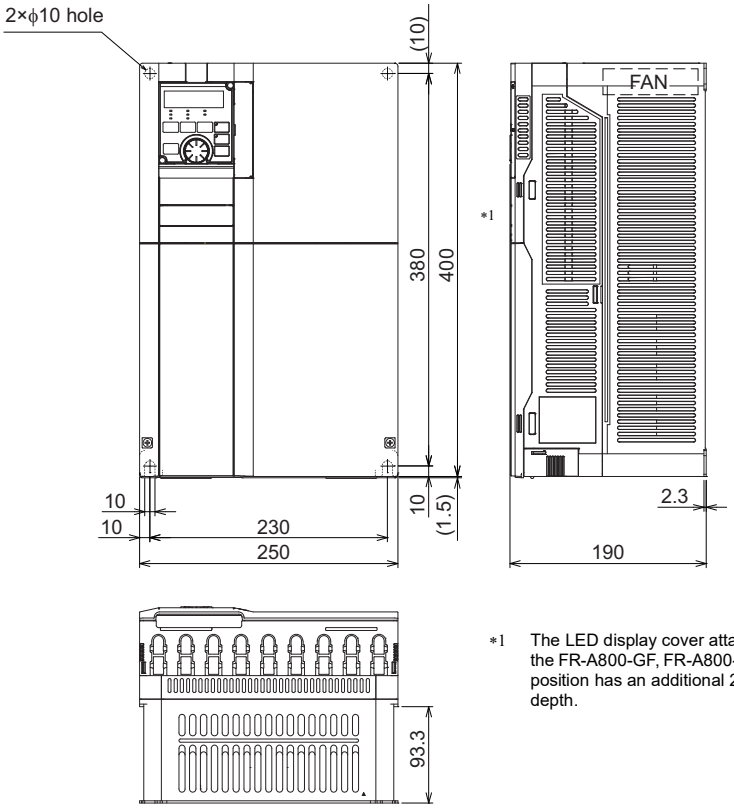

*1 The LED display cover attached to the FR-A800-GF, FR-A800-GN in this position has an additional 2.1 mm depth.

(Unit: mm)

FR-A820-01540(30K)(-E)(-GF)(-GN)(-F)
FR-A840-00770(30K)(-E)(-GF)(-GN)(-F)

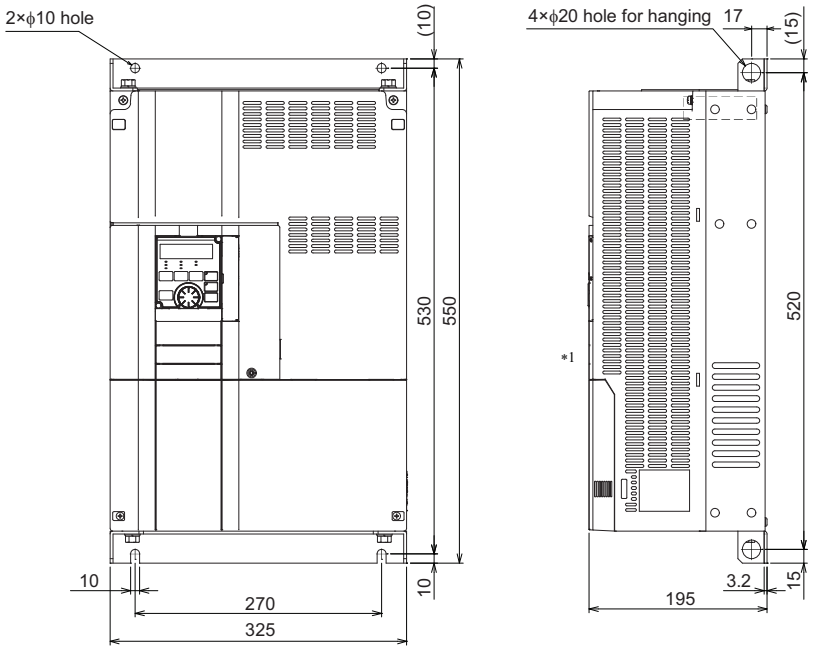

*1 The LED display cover attached to the FR-A800-GF, FR-A800-GN in this position has an additional 2.1 mm depth.

(Unit: mm)

FR-A820-01870(37K), 02330(45K), 03160(55K), 03800(75K), 04750(90K)(-E)(-GF)(-GN)(-F)
FR-A840-00930(37K), 01160(45K), 01800(55K), 02160(75K), 02600(90K), 03250(110K), 03610(132K)(-E)(-GF)(-GN)(-F)

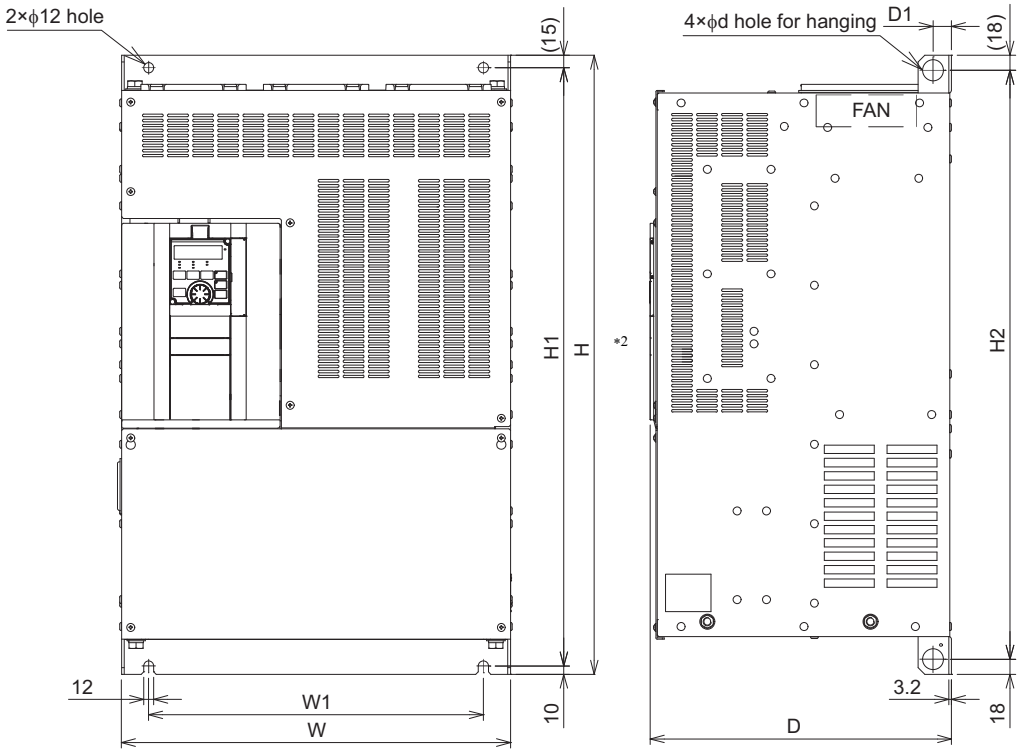

Inverter model	W	W1	H	H1	H2	d	D	D1
FR-A820-01870(37K), 02330(45K) FR-A840-00930(37K), 01160(45K), 01800(55K)*1	435	380	550	525	514	25	250	24
FR-A820-03160(55K)*1	465	410	700	675	664	25	250	22
FR-A820-03800(75K)*1, 04750(90K)*1	465	400	740	715	704	24	360	22
FR-A840-02160(75K)*1, 02600(90K)*1	465	400	620	595	584	24	300	22
FR-A840-03250(110K)*1, 03610(132K)*1	465	400	740	715	704	25	360	22

*1 For the FR-A820-03800(75K) or higher, the FR-A840-02160(75K) or higher, or whenever a 75 kW or higher motor is used, always connect a DC reactor (FR-HEL), which is available as an option.
*2 The LED display cover attached to the FR-A800-GF, FR-A800-GN in this position has an additional 2.1 mm depth.

(Unit: mm)

FR-A840-04320(160K), 04810(185K)(-E)(-GF)(-GN)(-F)

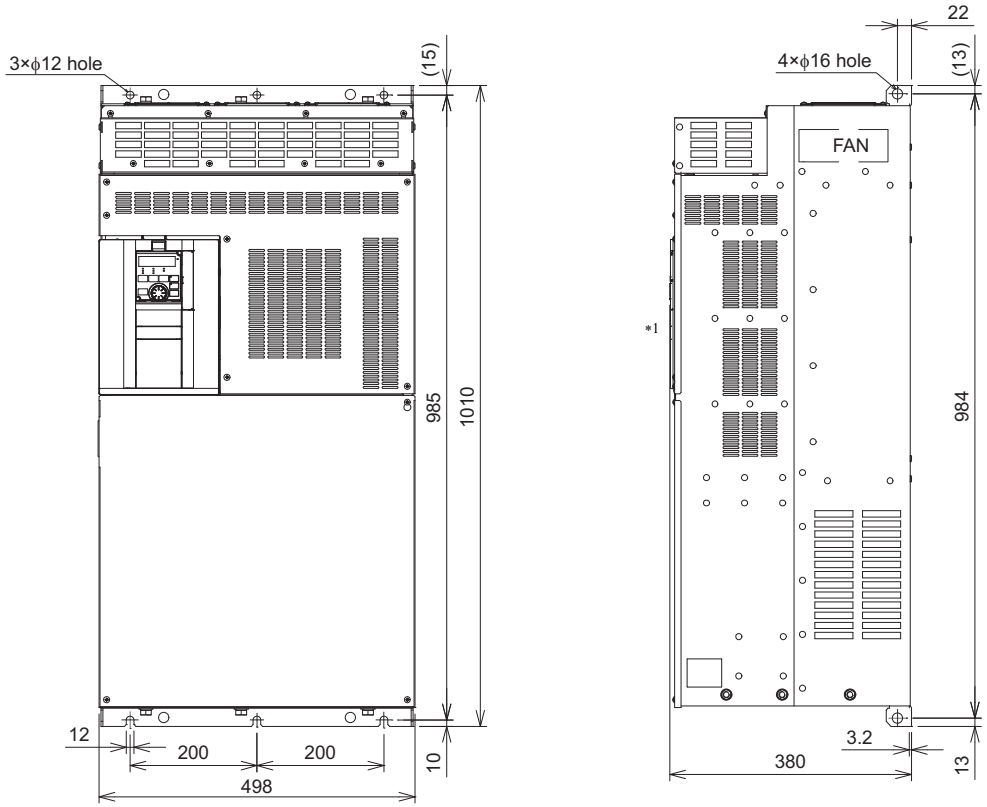

Always connect a DC reactor (FR-HEL), which is available as an option.

*1 The LED display cover attached to the FR-A800-GF, FR-A800-GN in this position has an additional 2.1 mm depth.

(Unit: mm)

FR-A840-05470(220K), 06100(250K), 06830(280K)(-E)(-GF)(-GN)(-F)

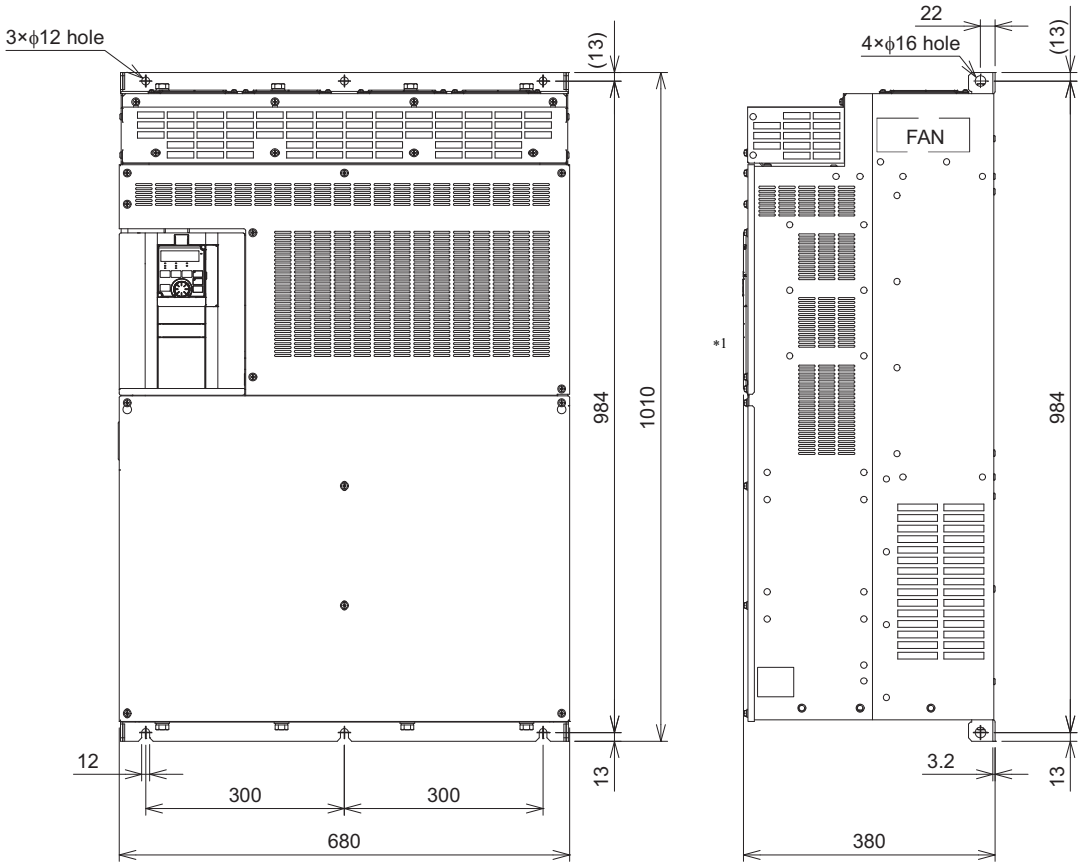

Always connect a DC reactor (FR-HEL), which is available as an option.

*1 The LED display cover attached to the FR-A800-GF, FR-A800-GN in this position has an additional 2.1 mm depth.

(Unit: mm)

● Separated converter type

◆ Inverter

FR-A842-07700(315K), 08660(355K)(-E)(-GF)(-GN)(-F)

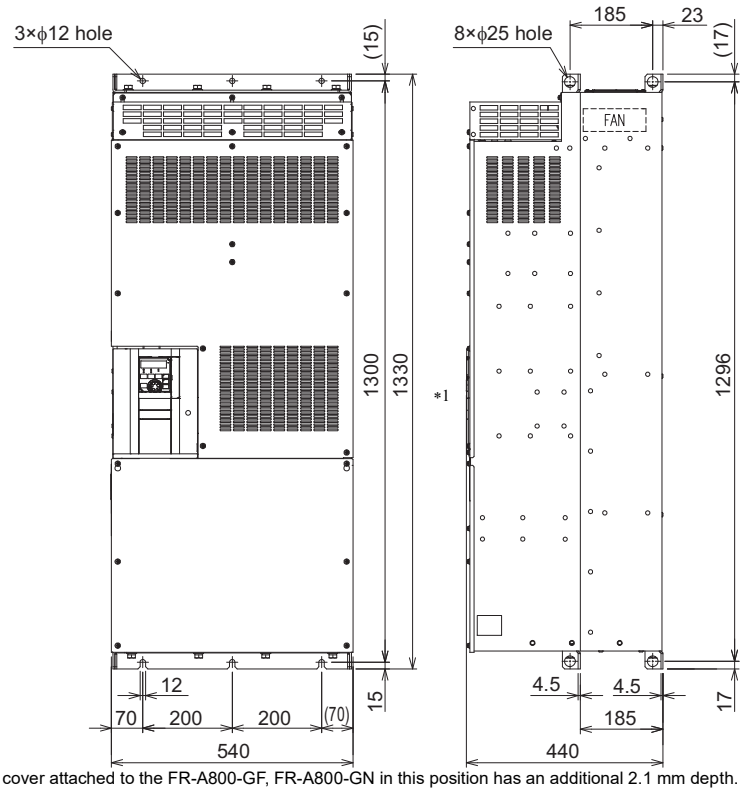

*1 The LED display cover attached to the FR-A800-GF, FR-A800-GN in this position has an additional 2.1 mm depth.

(Unit: mm)

FR-A842-09620(400K), 10940(450K), 12120(500K)(-E)(-GF)(-GN)(-P)(-F)

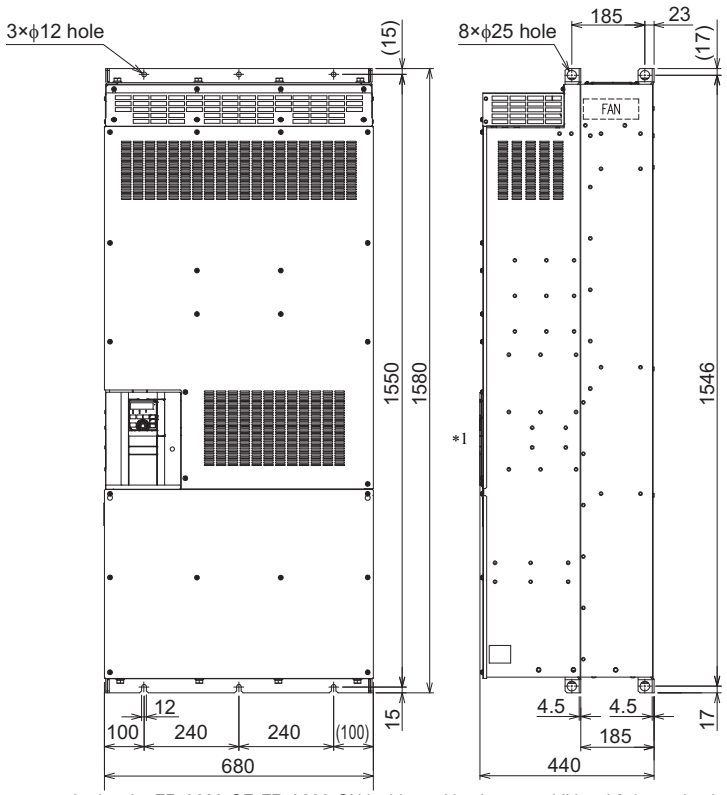

*1 The LED display cover attached to the FR-A800-GF, FR-A800-GN in this position has an additional 2.1 mm depth.

(Unit: mm)

◆ Converter unit

Equipped with a DC reactor.

FR-CC2-H315K, H355K

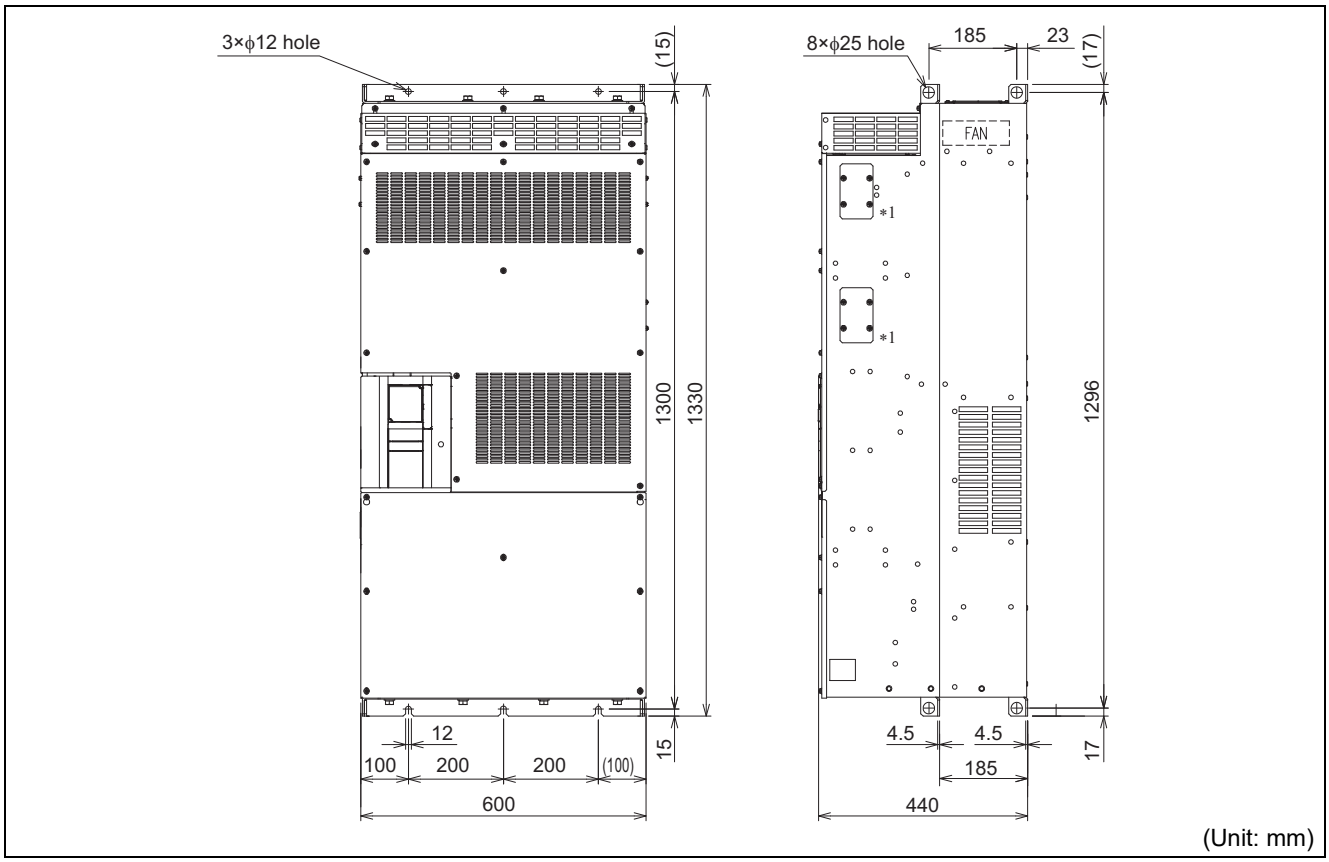

FR-CC2-H400K(-P), H450K(-P), H500K(-P), H560K(-P), H630K

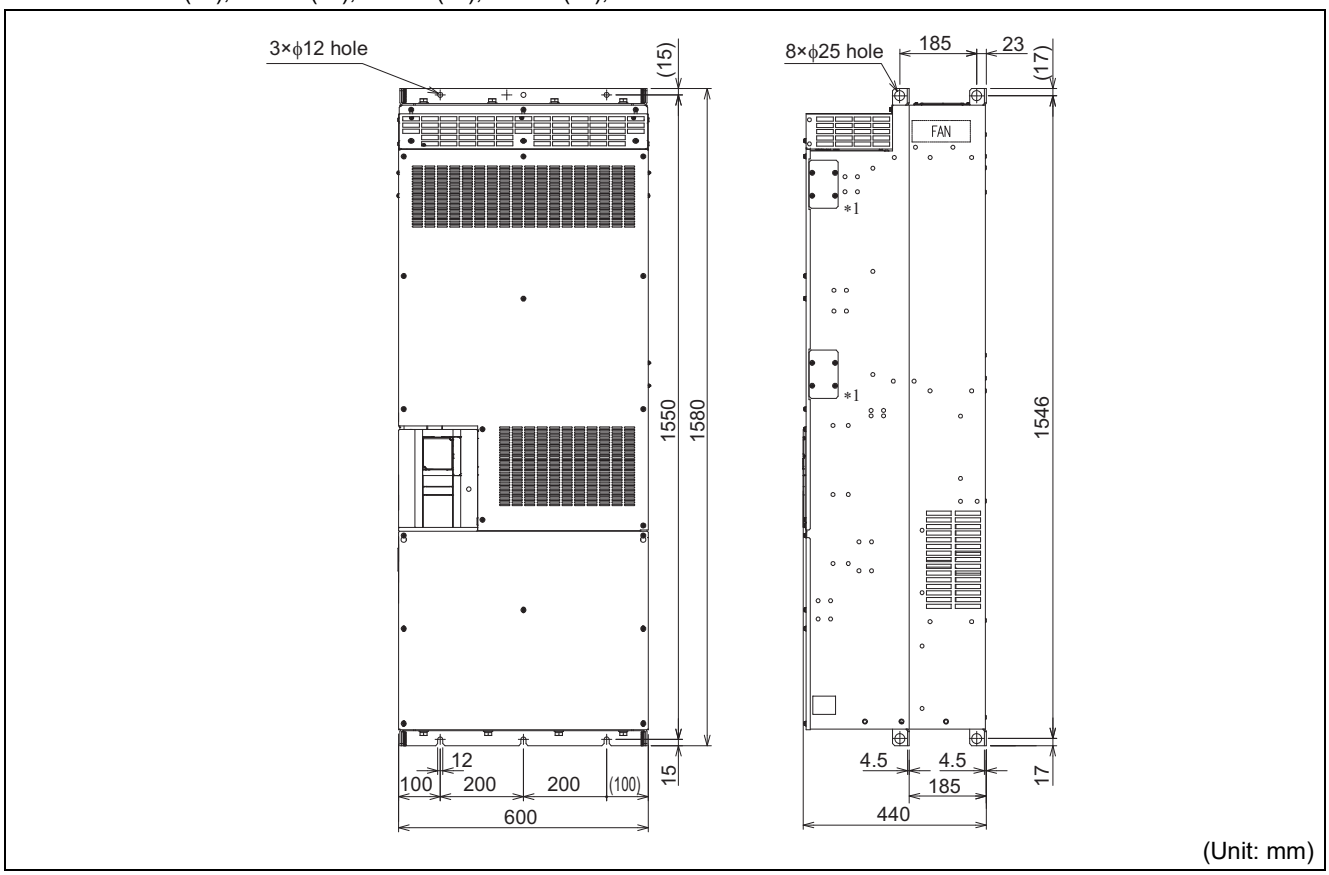

*1 Do not remove the cover on the side of the converter unit.

IP55 compatible model

Equipped with a DC reactor.

FR-A846-00023(0.4K), 00038(0.75K), 00052(1.5K), 00083(2.2K), 00126(3.7K), 00170(5.5K)(-E)

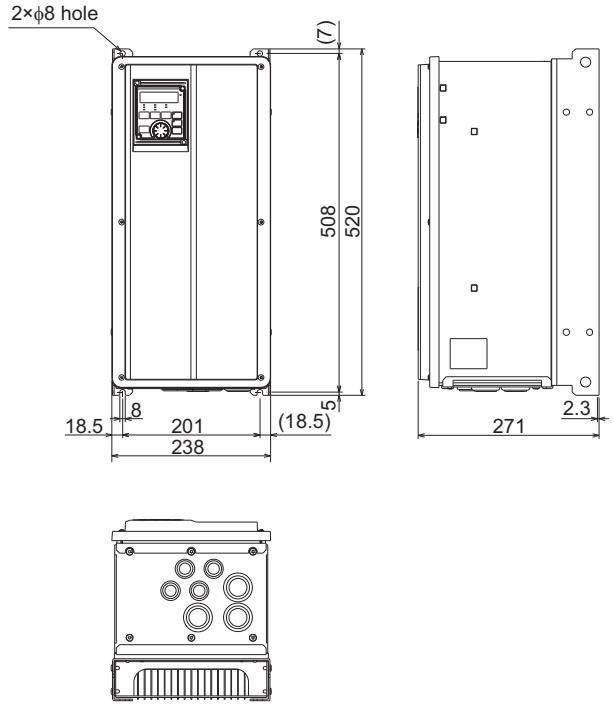

(Unit: mm)

FR-A846-00250(7.5K), 00310(11K), 00380(15K), 00470(18.5K)(-E)

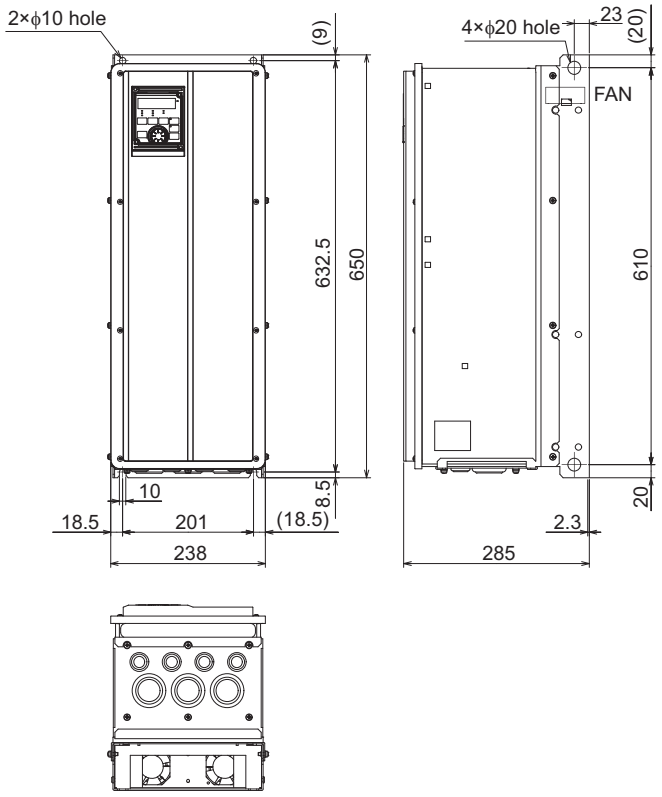

(Unit: mm)

FR-A846-00620(22K), 00770(30K), 00930(37K), 01160(45K)(-E)

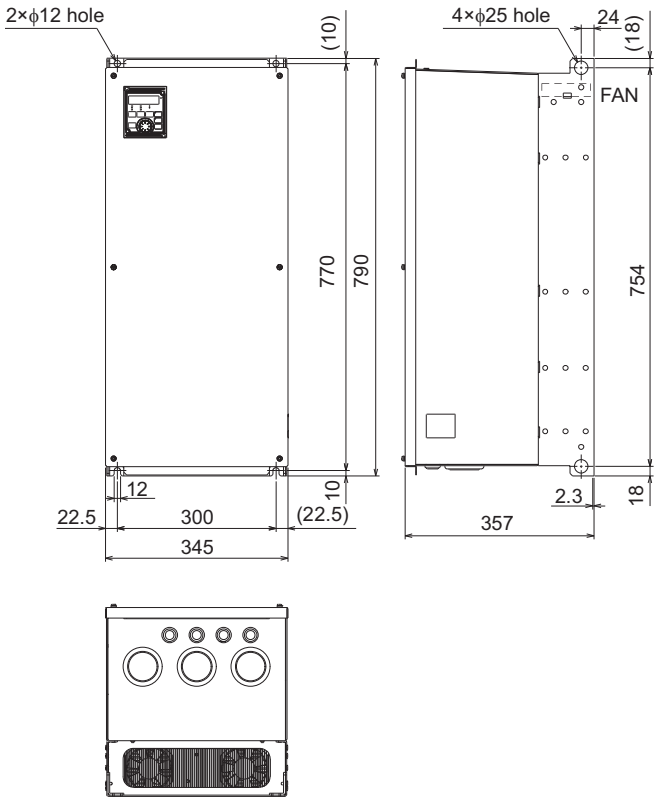

(Unit: mm)

FR-A846-01800(55K), 02160(75K), 02600(90K), 03250(110K), 03610(132K)(-E)

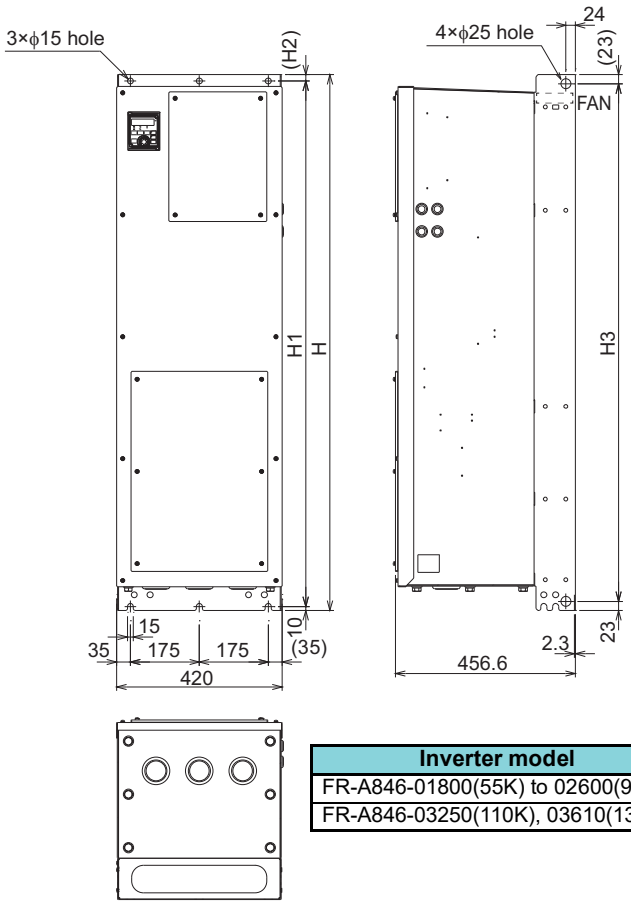

Inverter model	H	H1	H2	H3
FR-A846-01800(55K) to 02600(90K)	1360	1334	16	1314
FR-A846-03250(110K), 03610(132K)	1510	1482	18	1464

(Unit: mm)

Slim model

FR-A840M-03630(160K), FR-A840M-04540(200K)

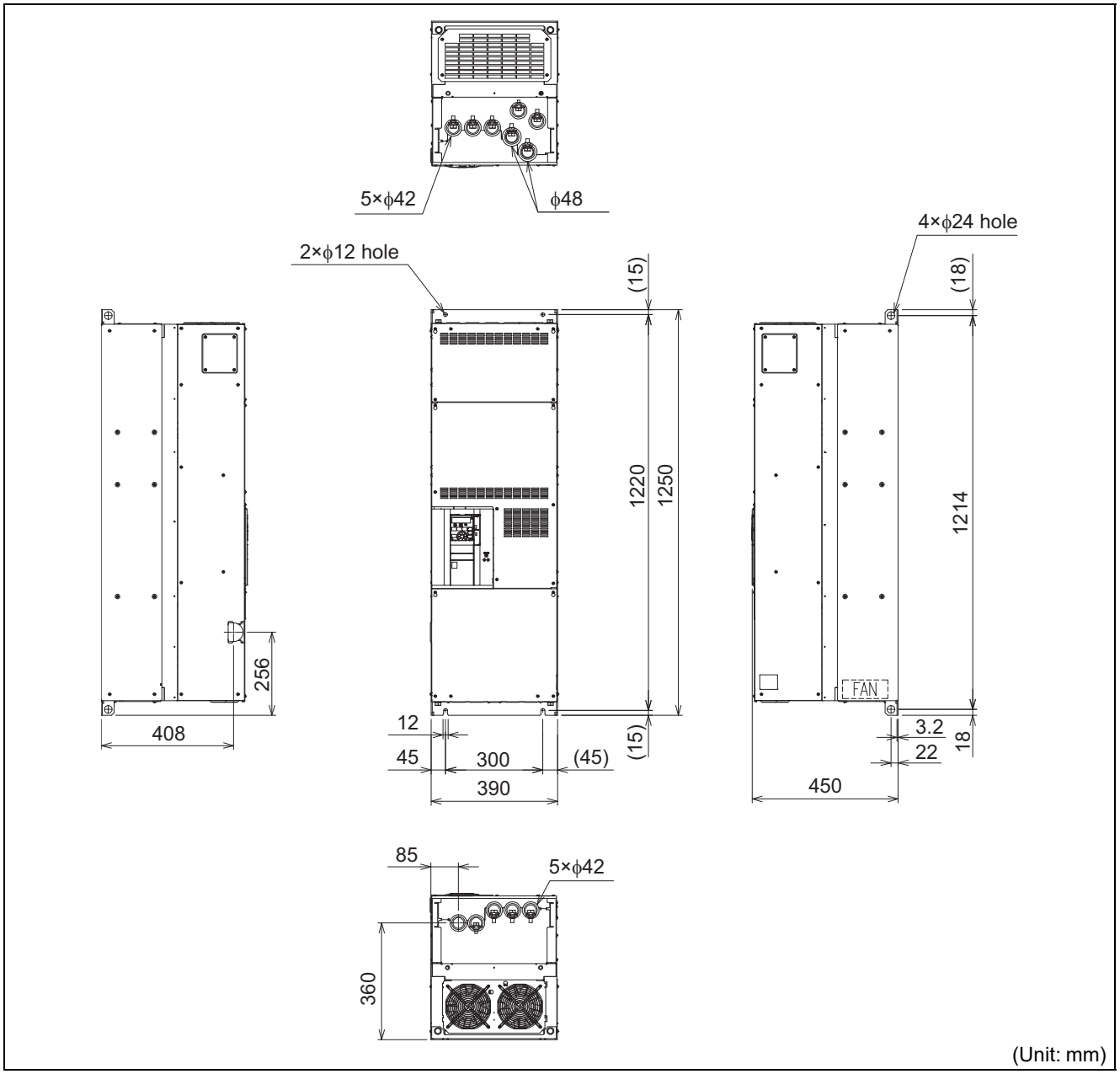

Slim model (Separated converter types)

◆Inverter

FR-A842M-05080(250K) to 06440(315K)

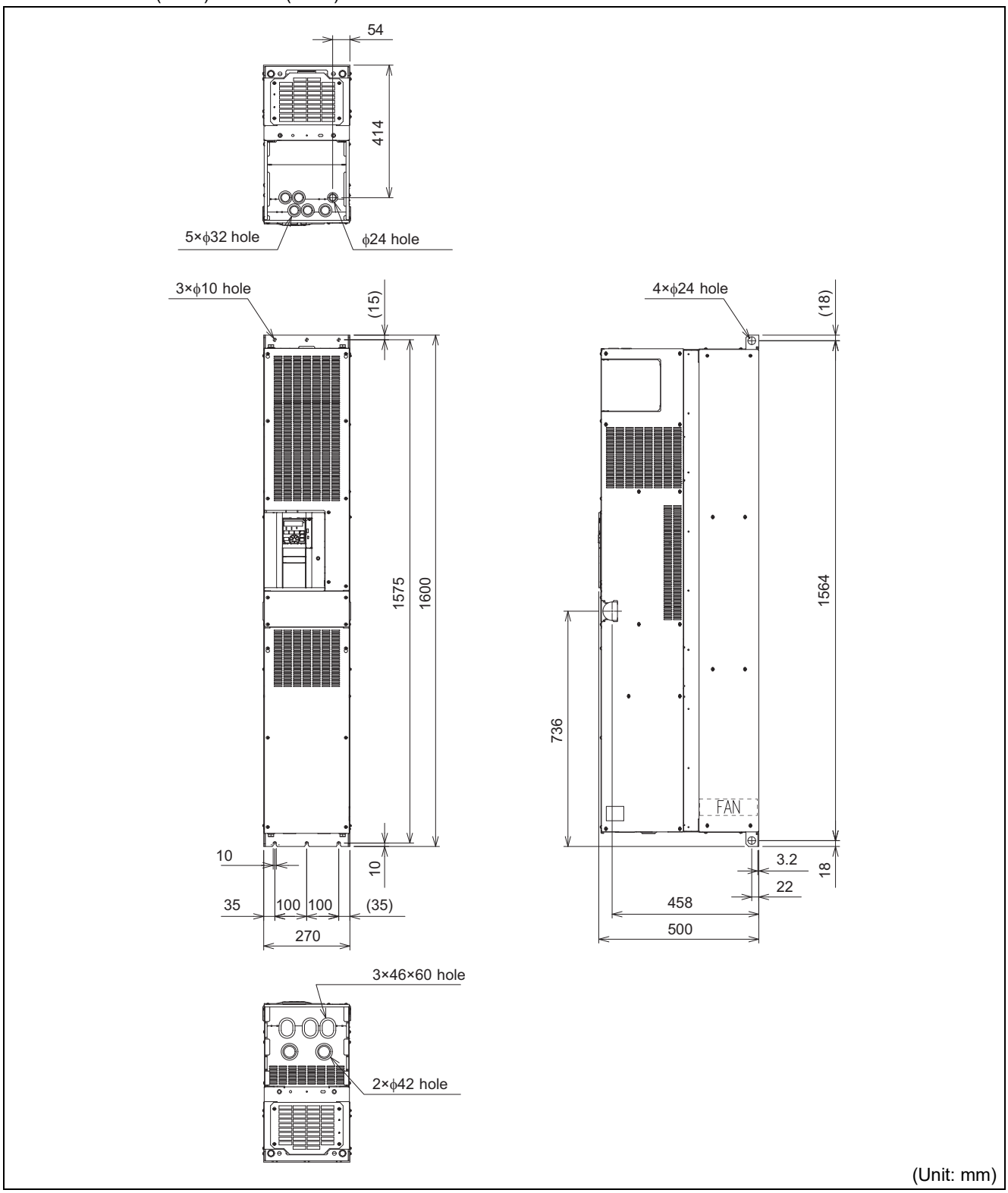

FR-A842M-07260(355K) to 10160(500K)

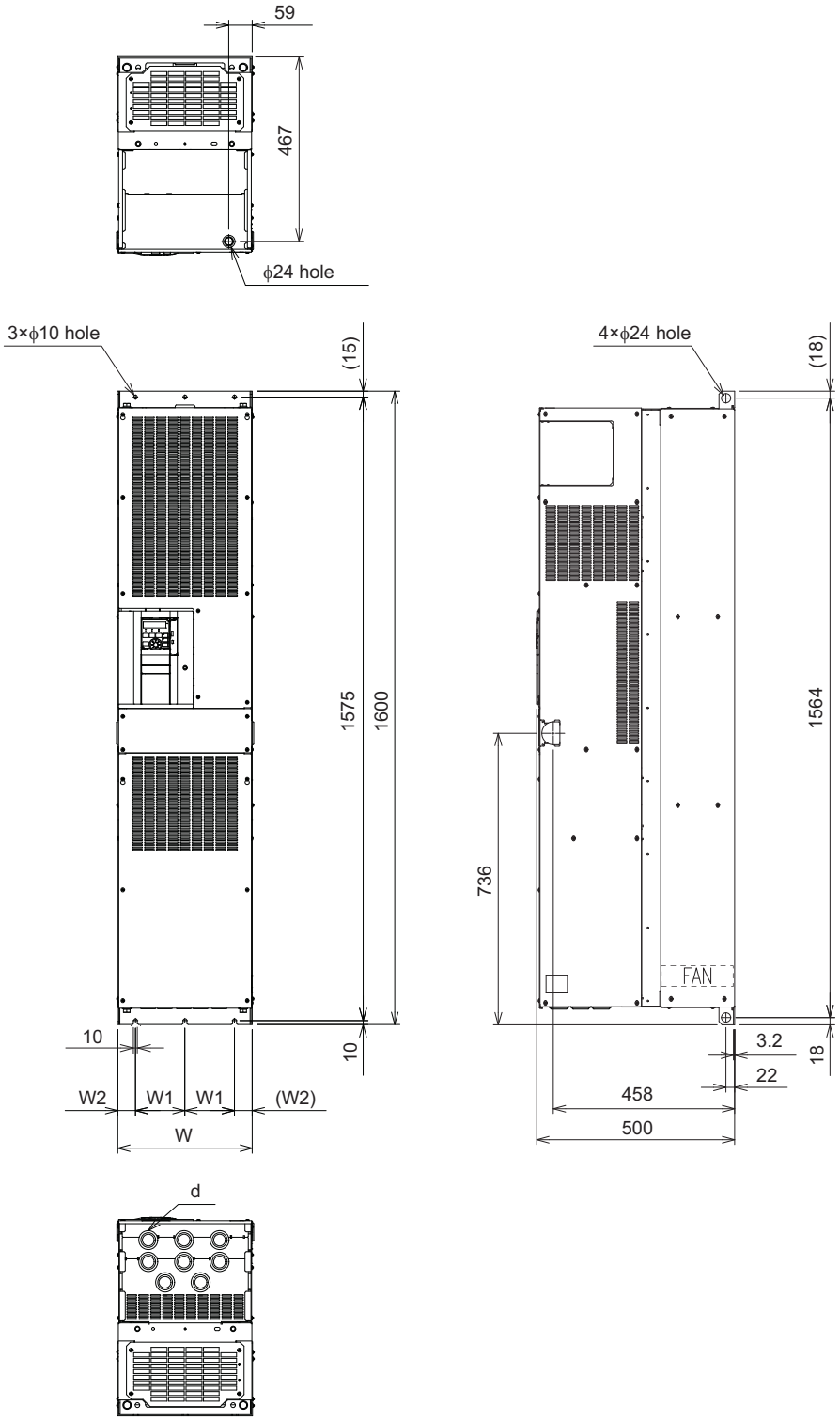

Inverter model	W	W1	W2	d
FR-A842M-07260(355K), 08170(400K)	340	125	45	8×ϕ38 hole
FR-A842M-09080(450K), 10160(500K)	400	150	50	8×ϕ42 hole

(Unit: mm)

◆ Converter unit

FR-CC2M-H250K(12P), H280K(12P), H315K(12P)

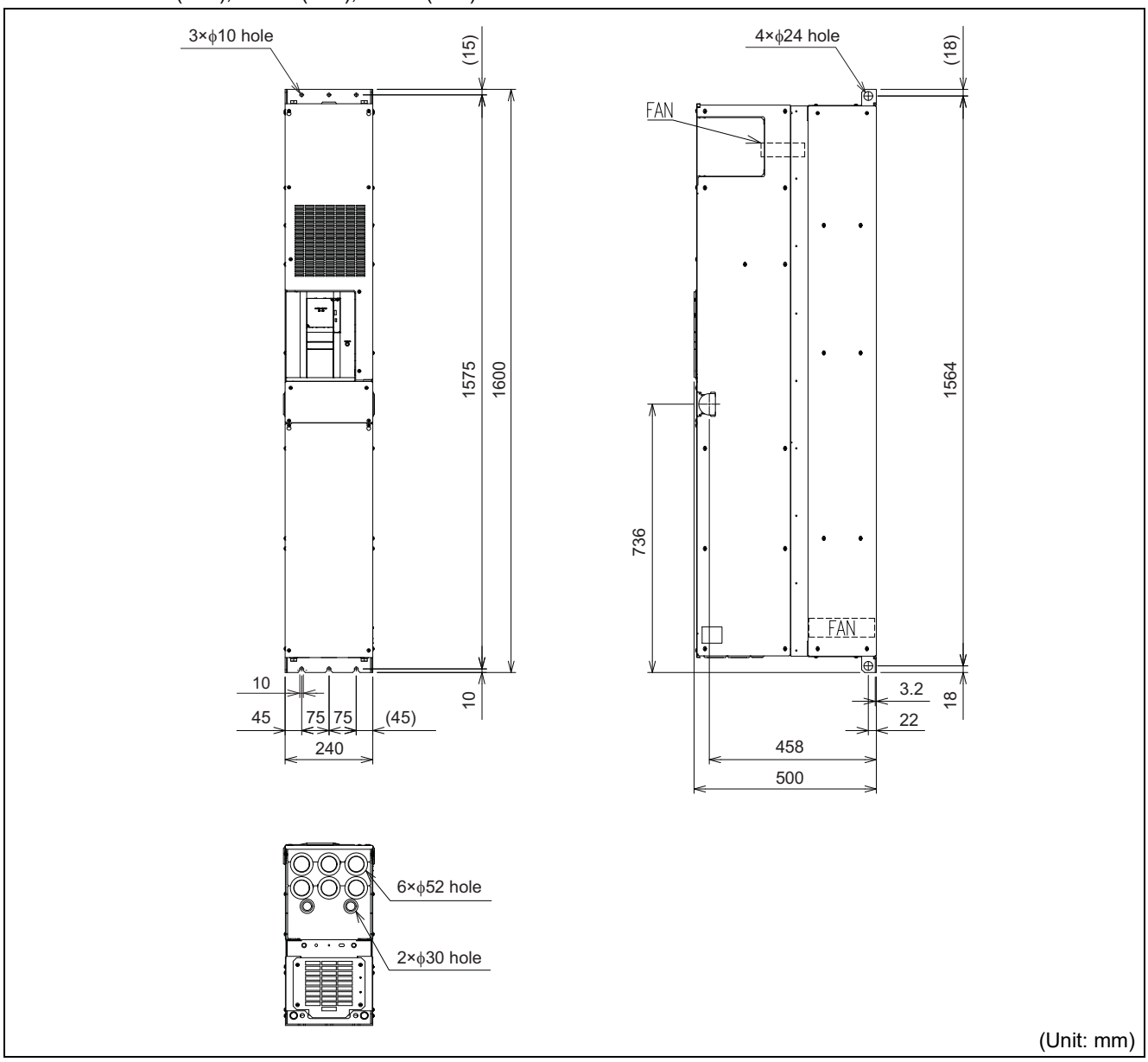

FR-CC2M-H355K(12P), H400K(12P), H450K(12P), H500K(12P), H560K(12P)

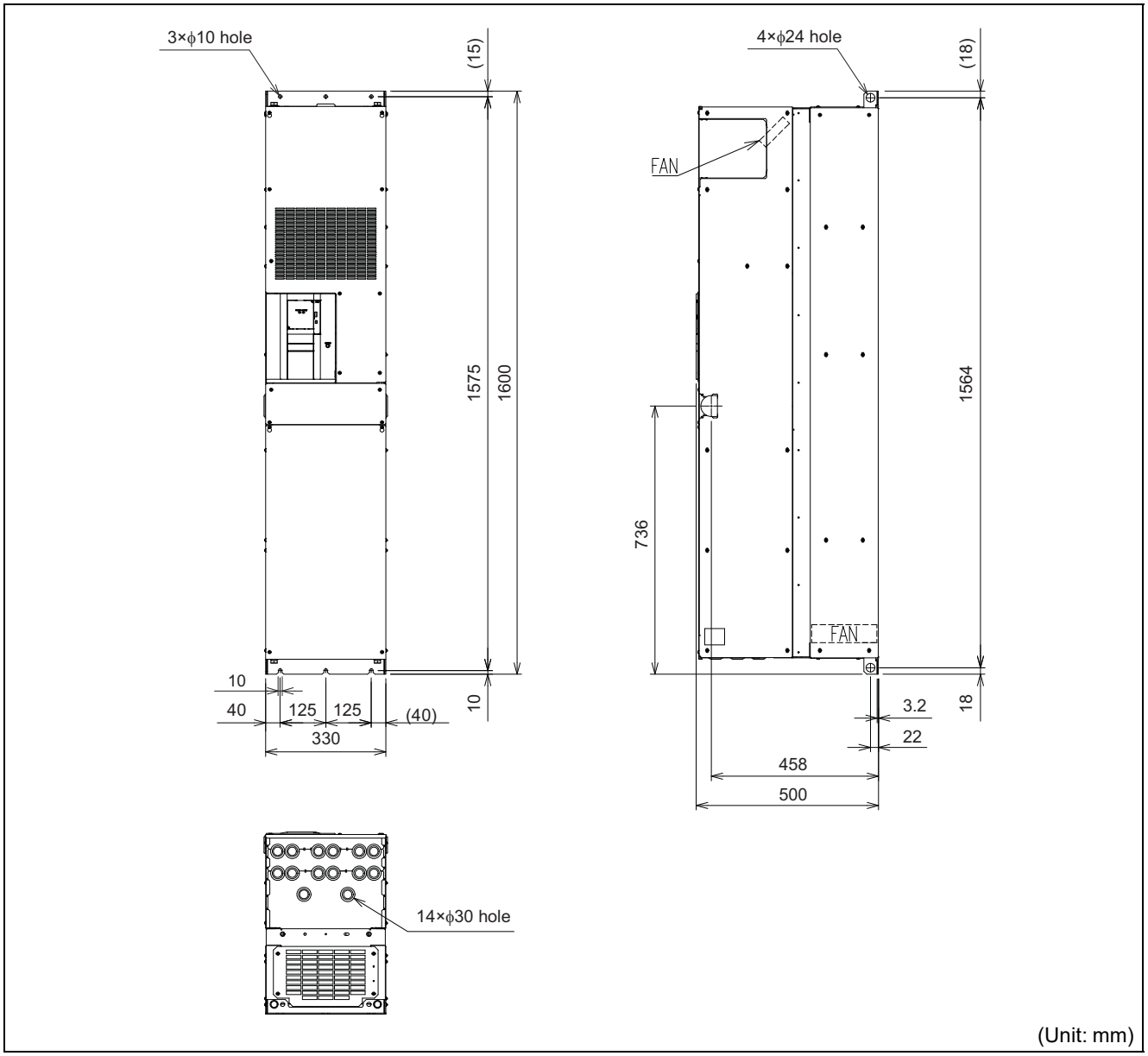

Operation panel (FR-DU08, FR-LU08)

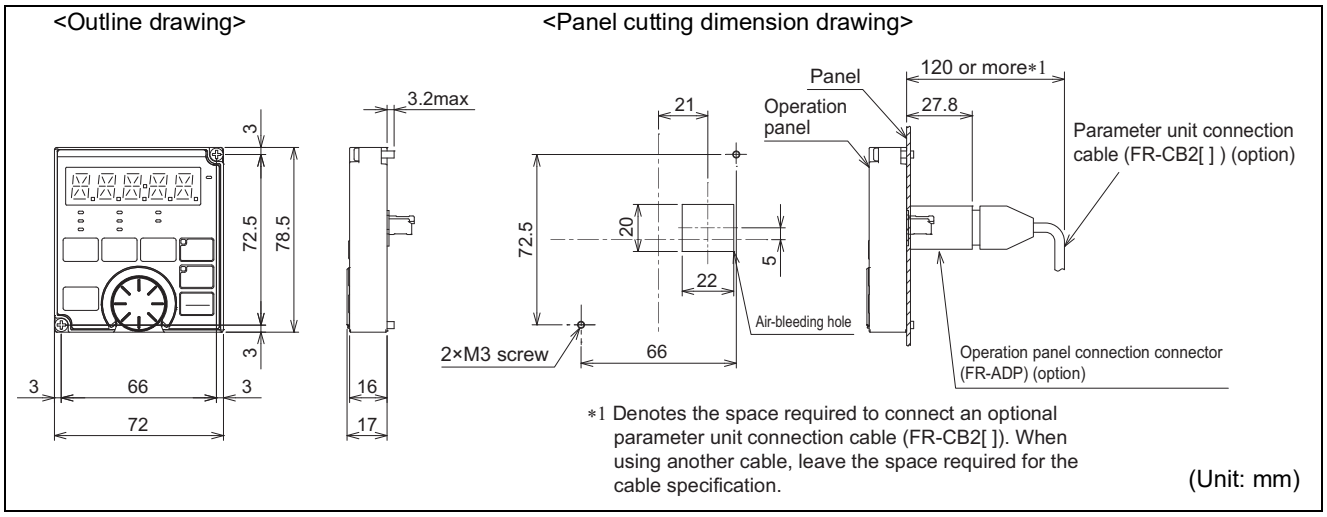

● Protruding the heat sink through the panel

When encasing the inverter or the converter unit in an enclosure, the heat generated in the enclosure can be greatly reduced by protruding the heat sink of the inverter or the converter unit. When installing the inverter in a compact enclosure, etc., this installation method is recommended. For the FR-A840-04320(160K) or higher, a heat sink can be protruded outside the enclosure without using an attachment.

◆ When using a panel through attachment (FR-A8CN)

For the FR-A820-00105(1.5K) to FR-A820-04750(90K) and FR-A840-00023(0.4K) to FR-A840-03610(132K), a heat sink can be protruded outside the enclosure using a panel through attachment (FR-A8CN). Refer to the Instruction Manual of the panel through attachment (FR-A8CN) for details.

- Drawing after attachment installation (when used with the FR-A8CN)

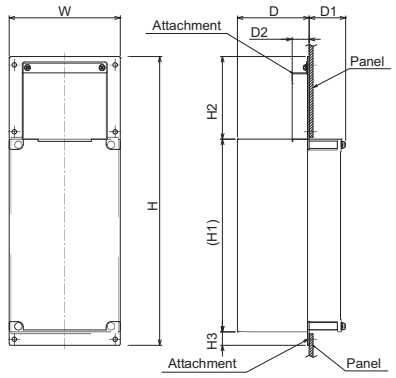

Type	W	H	H1	H2	H3	D	D1	D2
FR-A8CN01	150	389.5	260	111.5	18	97	48.4	24.3
FR-A8CN02	245	408.5	260	116.5	32	86	89.4	21.3
FR-A8CN03	245	448.5	300	116.5	32	89	106.4	21.3
FR-A8CN04	280	554	400	113.5	32	96.7	102.4	40.6
FR-A8CN05	357	654	480	130	44	130.8	64.2	105
FR-A8CN06	478.2	650	465	145	40	96	154	55
FR-A8CN07	510.2	805	610	150	45	130	120	105
FR-A8CN08	510.2	845	650	150	45	176.5	183.5	40
FR-A8CN09	510.2	725	530	150	45	152.3	147.7	65

(Unit: mm)

- Enclosure cut dimensions (when used with the FR-A8CN)

FR-A8CN01

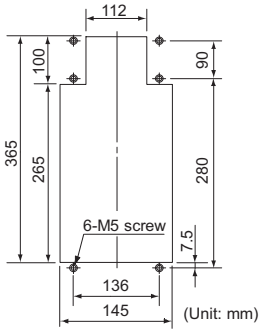

FR-A8CN02

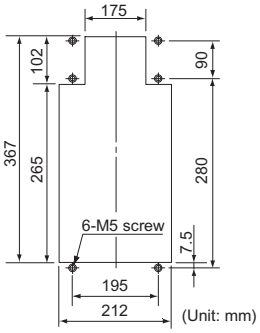

FR-A8CN03

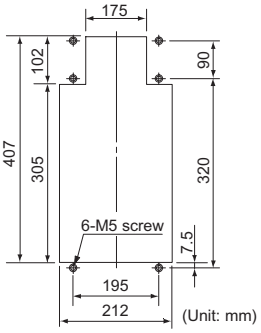

FR-A8CN04

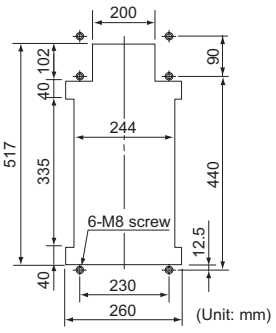

FR-A8CN05

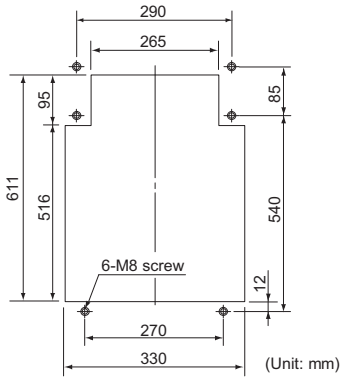

FR-A8CN06

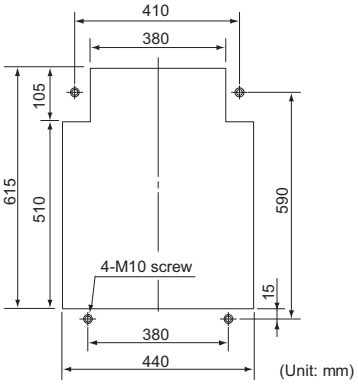

FR-A8CN07

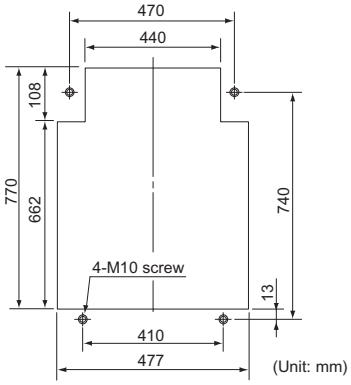

FR-A8CN08

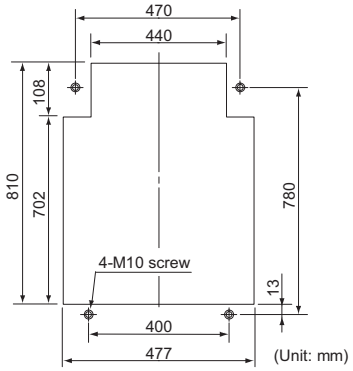

FR-A8CN09

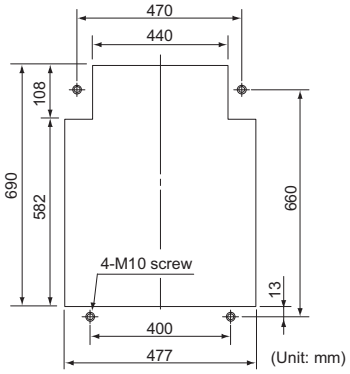

For a compatibility table between the attachment and the inverter, refer to **page 149**.

◆ Heat sink protrusion through the panel for the FR-A840-04320(160K) or higher

- Enclosure cutting
  Cut an enclosure according to the capacity of the inverter or the converter unit.

FR-A840-04320(160K)
FR-A840-04810(185K)

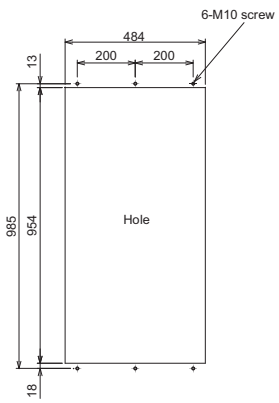

FR-A840-05470(220K)
FR-A840-06100(250K)
FR-A840-06830(280K)

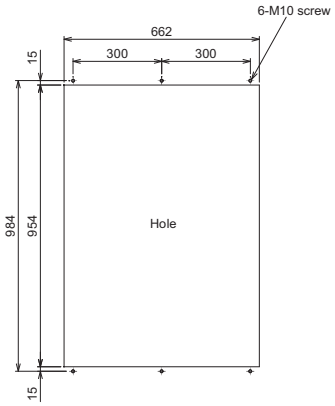

FR-A842-07700(315K)
FR-A842-08660(355K)

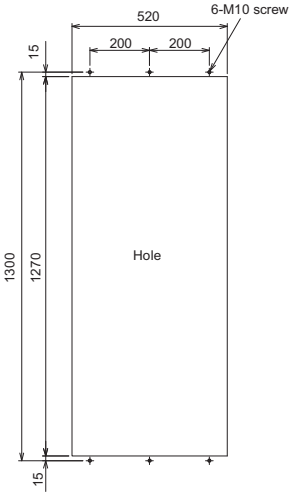

FR-A842-09620(400K)
FR-A842-10940(450K)
FR-A842-12120(500K)

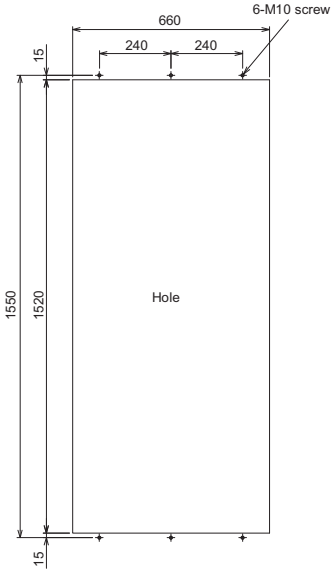

FR-CC2-H315K
FR-CC2-H355K

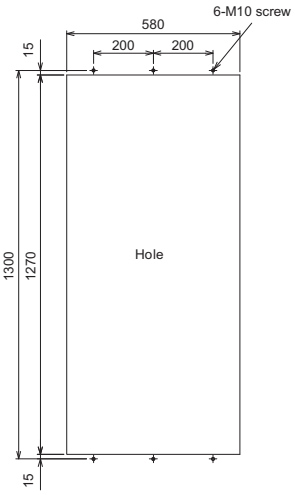

FR-CC2-H400K
FR-CC2-H450K
FR-CC2-H500K
FR-CC2-H560K
FR-CC2-H630K

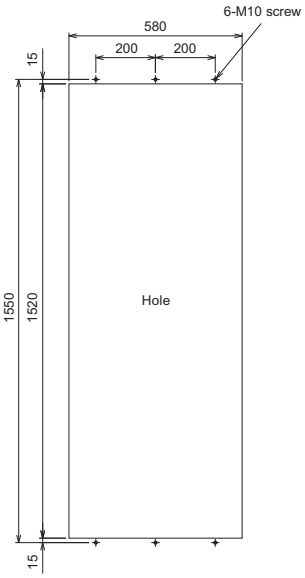

(Unit: mm)

- Shift and removal of a rear side installation frame

For the FR-A840-04320(160K) to FR-A840-06830(280K)

One installation frame is attached to each of the upper and lower parts of the inverter. Change the position of the rear side installation frame on the upper and lower sides of the inverter to the front side as shown below. When changing the installation frames, make sure that the installation orientation is correct.

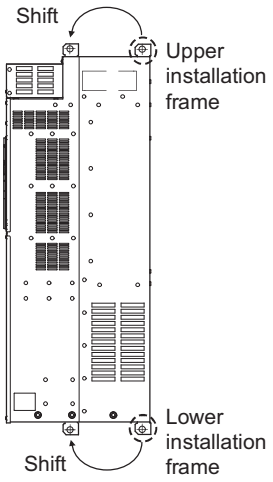

For the FR-A842-07700(315K) to FR-A842-12120(500K), FR-CC2-H315K to FR-CC2-H630K

Two installation frames are attached to each of the upper and lower parts of the inverter or the converter unit. Remove the rear side installation frame on the upper and lower sides of the inverter or the converter unit as shown below.

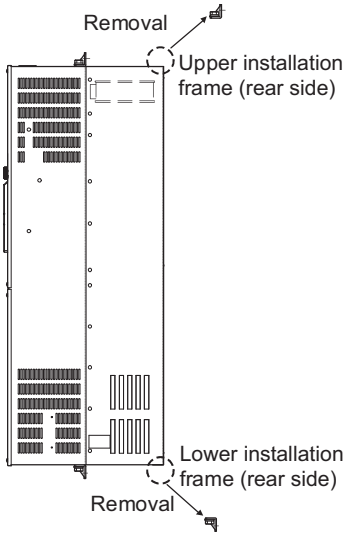

- Installation of the inverter or the converter unit

Push the inverter heat sink portion outside the enclosure and fix the enclosure and the inverter or the converter unit with upper and lower installation frame.

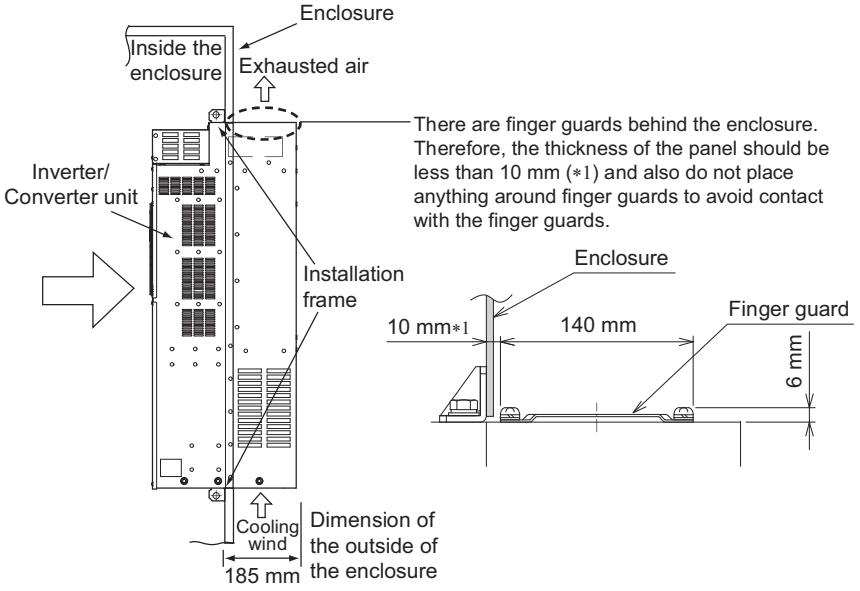

NOTE

- Having a cooling fan, the cooling section which comes out of the enclosure cannot be used in the environment of water drops, oil, mist, dust, etc.
- Be careful not to drop screws, dust etc. into the inverter or the converter unit and the cooling fan section.
- The FR-A7CN panel through attachment cannot be installed on the FR-A800 series.

Terminal Connection Diagram

Standard models and IP55 compatible models

FM type

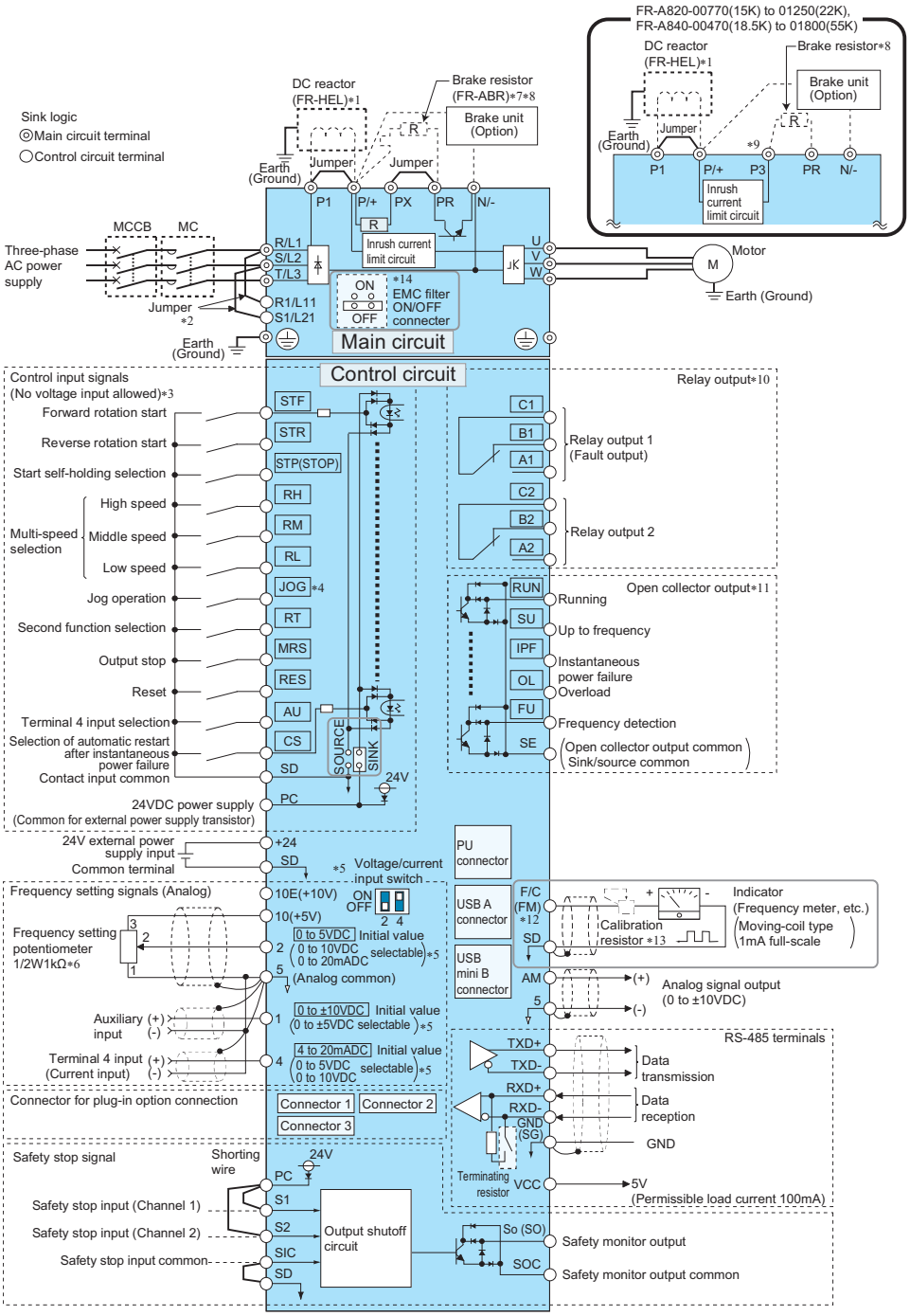

*1 For the FR-A820-03800(75K) or higher, the FR-A840-02160(75K) or higher, and when a 75 kW or higher motor is used, always connect a DC reactor (FR-HEL), which is available as an option. (To select a DC reactor, refer to **page 37**, **page 189**, and select one according to the applicable motor capacity.) When connecting a DC reactor, if a jumper is installed across terminals P1 and P/+, remove the jumper before installing the DC reactor. The IP55 compatible model has a built-in DC reactor. (The jumper is not installed for the FR-A820-03800(75K) or higher and the FR-A840-02160(75K) or higher.)

*2 When using separate power supply for the control circuit, remove the jumper between R1/L11 and S1/L21. IP55 compatible models do not have terminals R1/L11, S1/L21, and jumpers.

*3 Terminal functions can be changed using the Input terminal function selection (**Pr.178 to Pr.189**).

*4 Terminal JOG is also used as a pulse train input terminal. Use **Pr.291** to choose JOG or pulse.

*5 Terminal input specifications can be changed by analog input specification switchover (**Pr.73, Pr.267**). To input a voltage, set the voltage/current input switch OFF. To input a current, set the voltage/current input switch ON. Terminals 10 and 2 are also used as a PTC input terminal. **(Pr.561)**

*6 It is recommended to use 2 W 1 kΩ when the frequency setting signal is changed frequently.

*7 If connecting a brake resistor, remove the jumper between PR and PX (FR-A820-00046(0.4K) to 00490(7.5K), FR-A840-00023(0.4K) to 00250(7.5K)).

*8 Connect a brake resistor across terminals P/+ (P3) and PR. (Terminal PR is equipped in FR-A820-00046(0.4K) to 01250(22K), FR-A840-00023(0.4K) to 01800(55K).) Install a thermal relay to prevent overheating and damage of brake resistors.

*9 Connect only a brake resistor to terminal P3.

*10 Terminal functions can be changed using the Output terminal function selection (**Pr.195, Pr.196**).

*11 Terminal functions can be changed using the Output terminal function selection (**Pr.190 to Pr.194**).

*12 Terminal F/C (FM) can be used to output pulse trains as open collector output by setting **Pr.291**.

*13 Not required when calibrating the scale with the operation panel.

*14 Do not change the initially set ON (enabled) position of the EMC filter ON/OFF connector in the case of the inverter with a built-in C2 filter (IP55 compatible model). The Class C2 compatibility condition is not satisfied with the EMC filter OFF. The FR-A846-00250(7.5K)-C2 to FR-A846-00470(18.5K)-C2 are not provided with the EMC filter ON/OFF connector. The EMC filter is always ON.

◆ **CA type**

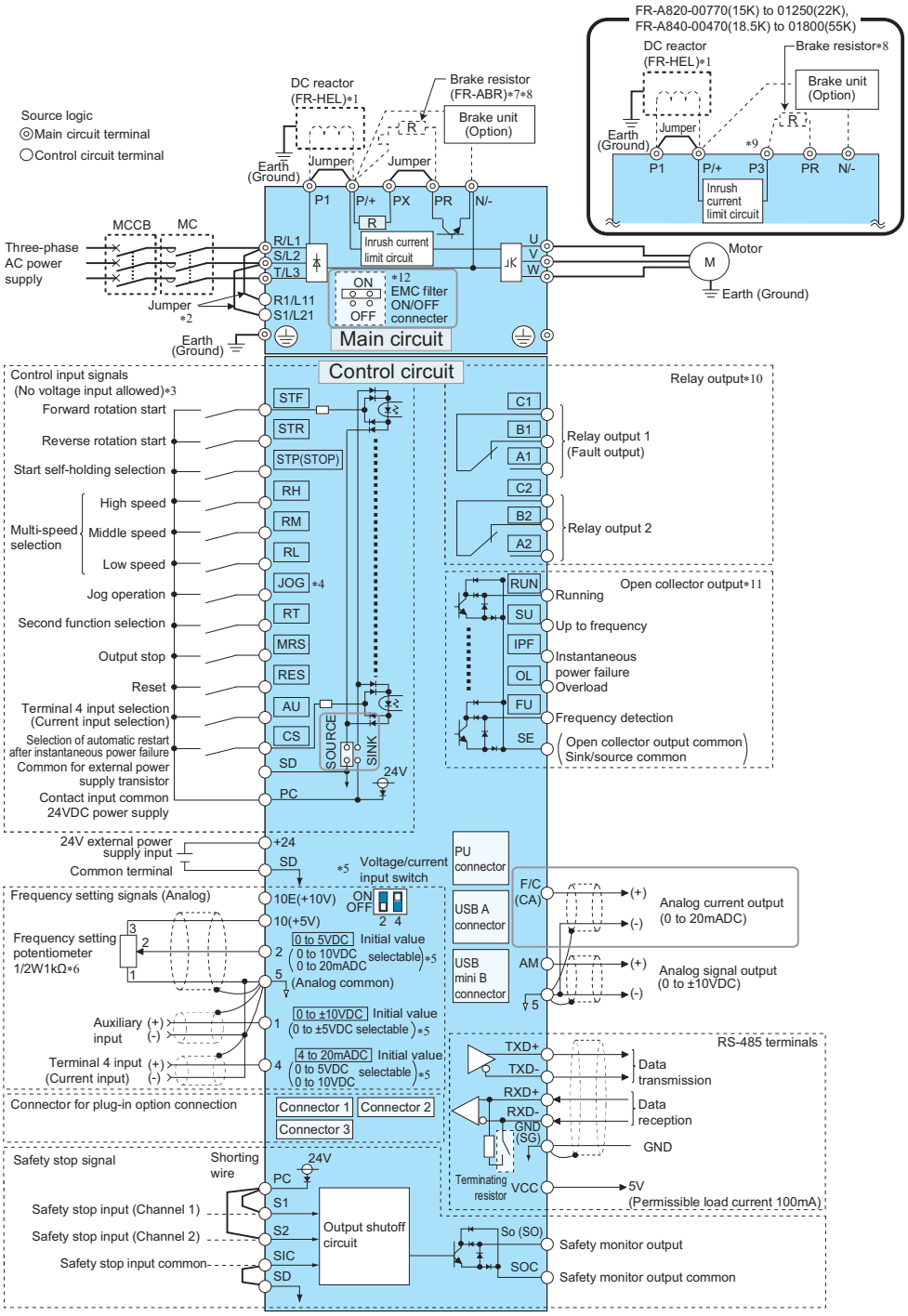

*1 For the FR-A820-03800(75K) or higher, the FR-A840-02160(75K) or higher, and when a 75 kW or higher motor is used, always connect a DC reactor (FR-HEL), which is available as an option. (To select a DC reactor, refer to **page 37**, **page 189**, and select one according to the applicable motor capacity.) When connecting a DC reactor, if a jumper is installed across terminals P1 and P/+, remove the jumper before installing the DC reactor. The IP55 compatible model has a built-in DC reactor. (The jumper is not installed for the FR-A820-03800(75K) or higher and the FR-A840-02160(75K) or higher.)

*2 When using separate power supply for the control circuit, remove the jumper between R1/L11 and S1/L21. IP55 compatible models do not have terminals R1/L11, S1/L21, and jumpers.

*3 Terminal functions can be changed using the Input terminal function selection (**Pr.178 to Pr.189**).

*4 Terminal JOG is also used as a pulse train input terminal. Use **Pr.291** to choose JOG or pulse.

*5 Terminal input specifications can be changed by analog input specification switchover (**Pr.73, Pr.267**). To input a voltage, set the voltage/current input switch OFF. To input a current, set the voltage/current input switch ON. Terminals 10 and 2 are also used as a PTC input terminal. (**Pr.561**)

*6 It is recommended to use 2 W 1 kΩ when the frequency setting signal is changed frequently.

*7 If connecting a brake resistor, remove the jumper between PR and PX (FR-A820-00046(0.4K) to 00490(7.5K), FR-A840-00023(0.4K) to 00250(7.5K)).

*8 Connect a brake resistor across terminals P/+ (P3) and PR. (Terminal PR is equipped in FR-A820-00046(0.4K) to 01250(22K), FR-A840-00023(0.4K) to 01800(55K).) Install a thermal relay to prevent overheating and damage of brake resistors.

*9 Connect only a brake resistor to terminal P3.

*10 Terminal functions can be changed using the Output terminal function selection (**Pr.195, Pr.196**).

*11 Terminal functions can be changed using the Output terminal function selection (**Pr.190 to Pr.194**).

*12 Do not change the initially set ON (enabled) position of the EMC filter ON/OFF connector in the case of the inverter with a built-in C2 filter (IP55 compatible model). The Class C2 compatibility condition is not satisfied with the EMC filter OFF. The FR-A846-00250(7.5K)-C2 to FR-A846-00470(18.5K)-C2 are not provided with the EMC filter ON/OFF connector. The EMC filter is always ON.

Separated converter type

◆ FM type

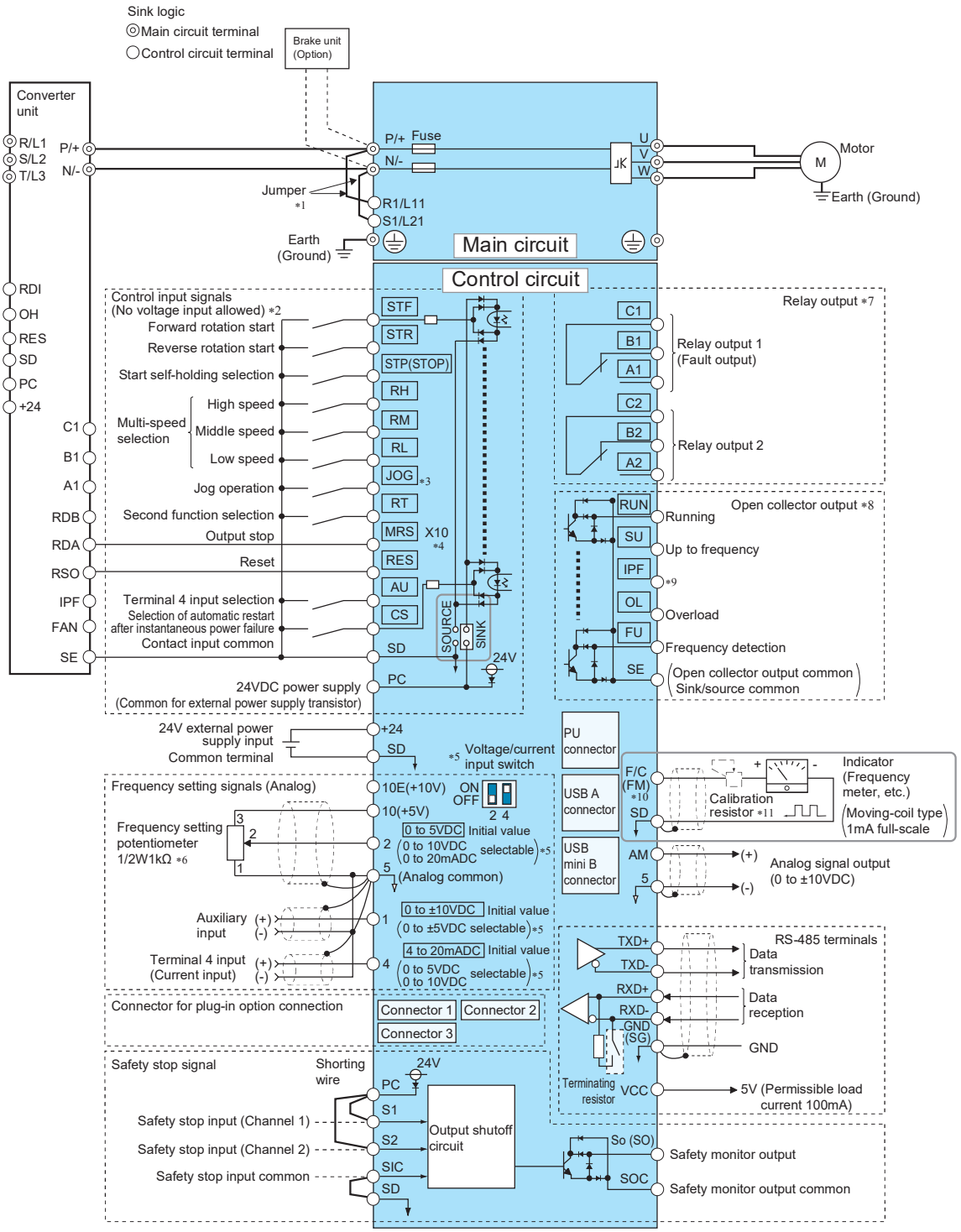

*1 Terminals R1/L11 and S1/L21 are connected to terminals P/+ and N/- with a jumper respectively. When using separate power supply for the control circuit, remove the jumpers from R1/L11 and S1/L21.
*2 Terminal functions can be changed using the Input terminal function selection (**Pr.178 to Pr.189**).
*3 Terminal JOG is also used as the pulse train input terminal. Use **Pr.291** to choose JOG or pulse.
*4 The X10 signal (NC contact input specification) is assigned to terminal MRS in the initial setting. Set **Pr.599** = "0" to change the input specification of the X10 signal to NO contact.
*5 Terminal input specifications can be changed by analog input specification switchover **(Pr.73, Pr.267).** To input a voltage, set the voltage/current input switch OFF. To input a current, set the voltage/current input switch ON. Terminals 10 and 2 are also used as a PTC input terminal. **(Pr.561)**
*6 It is recommended to use 2 W 1 kΩ when the frequency setting signal is changed frequently.
*7 Terminal functions can be changed using the Output terminal function selection (**Pr.195, Pr.196**).
*8 Terminal functions can be changed using the Output terminal function selection (**Pr.190 to Pr.194**).
*9 No function is assigned in the initial setting. Use **Pr.192** for function assignment.
*10 Terminal F/C (FM) can be used to output pulse trains as open collector output by setting **Pr.291**.
*11 Not required when calibrating the scale with the operation panel.

Converter unit (FR-CC2)

◆ When the sink logic is selected

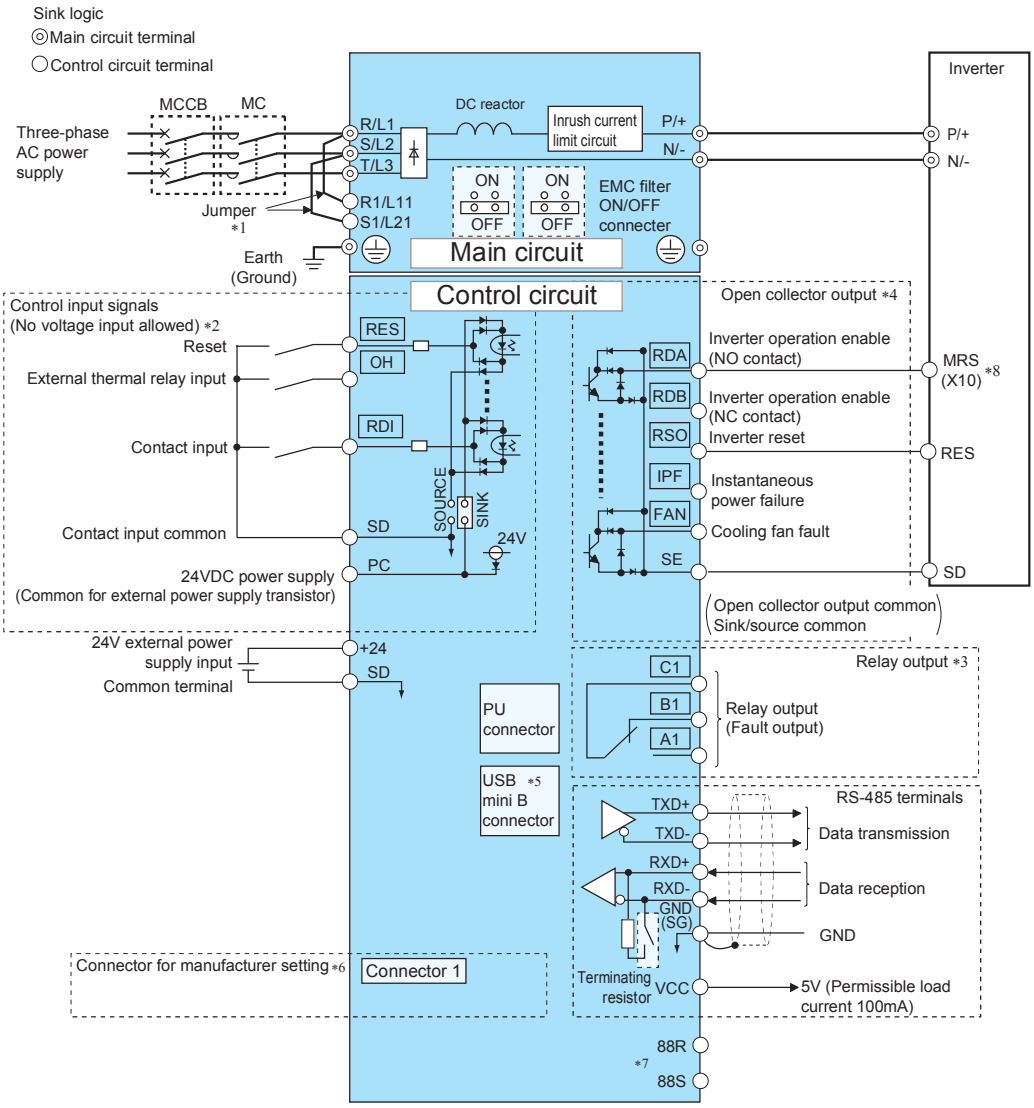

◆ For a 12-phase application

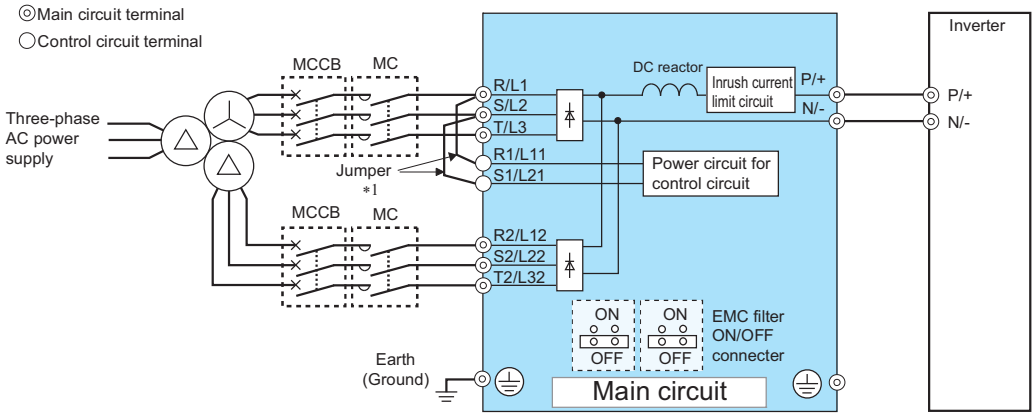

*1 When using separate power supply for the control circuit, remove the jumpers from R1/L11 and S1/L21.
*2 Terminal functions can be changed using the Input terminal function selection (**Pr.178, Pr.187, Pr.189**).
*3 Terminal functions can be changed using the Output terminal function selection (**Pr.195**).
*4 Terminal functions can be changed using the Output terminal function selection (**Pr.190 to Pr.194**).
*5 The connector is for manufacturer setting. Do not use.
*6 Plug-in options cannot be used.
*7 For manufacturer setting. Do not use.
*8 To use RDA signal of the converter unit, select the NC contact input specification for the input logic of MRS signal or X10 signal of the inverter.
To use RDB signal of the converter unit, select the NO contact input specification for the input logic of MRS signal or X10 signal of the inverter.
(For changing the input logic, refer to the Instruction Manual of the inverter.)

Standard models and IP55 compatible models (FR-A800-E)

FM type

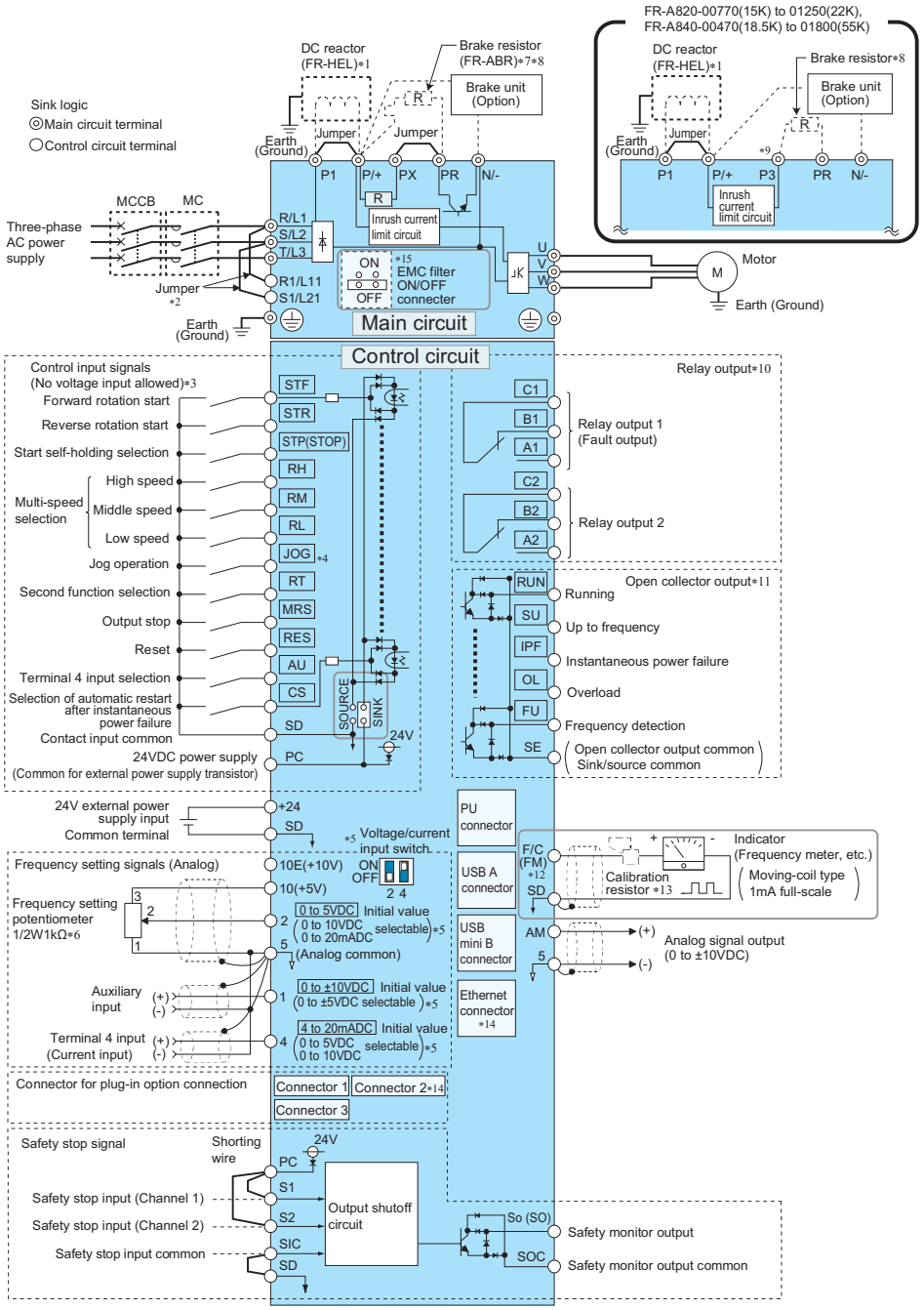

*1 For the FR-A820-03800(75K) or higher, the FR-A840-02160(75K) or higher, and when a 75 kW or higher motor is used, always connect a DC reactor (FR-HEL), which is available as an option. (To select a DC reactor, refer to **page 37**, **page 189**, and select one according to the applicable motor capacity.) When connecting a DC reactor, if a jumper is installed across terminals P1 and P/+, remove the jumper before installing the DC reactor. The IP55 compatible model has a built-in DC reactor. (The jumper is not installed for the FR-A820-03800(75K) or higher and the FR-A840-02160(75K) or higher.)

*2 When using separate power supply for the control circuit, remove the jumper between R1/L11 and S1/L21. IP55 compatible models do not have terminals R1/L11, S1/L21, and jumpers.

*3 Terminal functions can be changed using the Input terminal function selection (**Pr.178 to Pr.189**).

*4 Terminal JOG is also used as a pulse train input terminal. Use **Pr.291** to choose JOG or pulse.

*5 Terminal input specifications can be changed by analog input specification switchover (**Pr.73, Pr.267**). To input a voltage, set the voltage/current input switch OFF. To input a current, set the voltage/current input switch ON. Terminals 10 and 2 are also used as a PTC input terminal. **(Pr.561)**

*6 It is recommended to use 2 W 1 kΩ when the frequency setting signal is changed frequently.

*7 If connecting a brake resistor, remove the jumper between PR and PX (FR-A820-00046(0.4K) to 00490(7.5K), FR-A840-00023(0.4K) to 00250(7.5K)).

*8 Connect a brake resistor across terminals P/+ (P3) and PR. (Terminal PR is equipped in FR-A820-00046(0.4K) to 01250(22K), FR-A840-00023(0.4K) to 01800(55K).) Install a thermal relay to prevent overheating and damage of brake resistors.

*9 Connect only a brake resistor to terminal P3.

*10 Terminal functions can be changed using the Output terminal function selection (**Pr.195, Pr.196**).

*11 Terminal functions can be changed using the Output terminal function selection (**Pr.190 to Pr.194**).

*12 Terminal F/C (FM) can be used to output pulse trains as open collector output by setting **Pr.291**.

*13 Not required when calibrating the scale with the operation panel.

*14 The option connector 2 cannot be used because the Ethernet board is installed in the initial status. The Ethernet board must be removed to install a plug-in option to the option connector 2. (However, Ethernet communication is disabled in that case.)

*15 Do not change the initially set ON (enabled) position of the EMC filter ON/OFF connector in the case of the inverter with a built-in C2 filter (IP55 compatible model). The Class C2 compatibility condition is not satisfied with the EMC filter OFF. The FR-A846-00250(7.5K)-C2 to FR-A846-00470(18.5K)-C2 are not provided with the EMC filter ON/OFF connector. The EMC filter is always ON.

◆ **CA type**

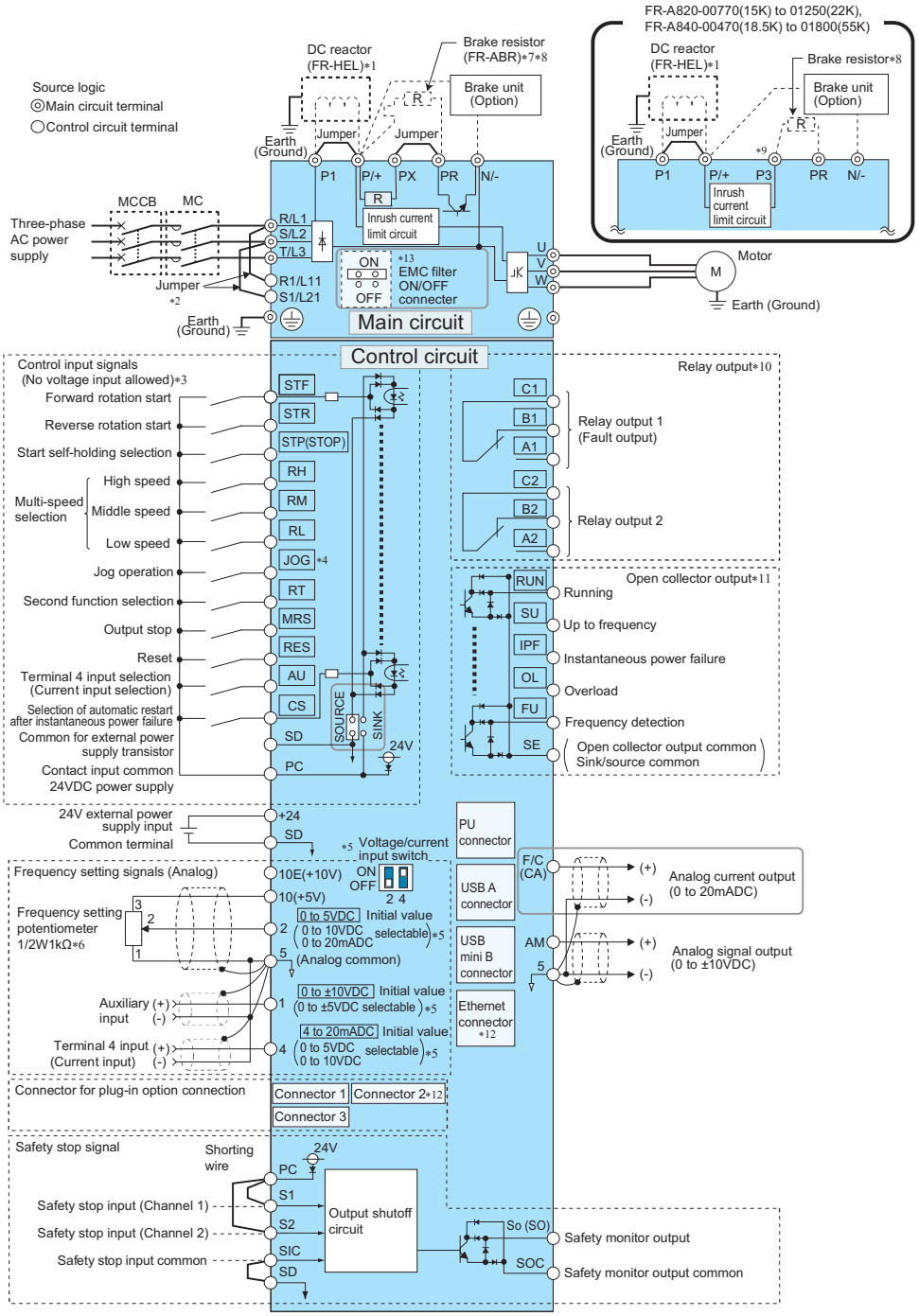

*1 For the FR-A820-03800(75K) or higher, the FR-A840-02160(75K) or higher, and when a 75 kW or higher motor is used, always connect a DC reactor (FR-HEL), which is available as an option. (To select a DC reactor, refer to **page 37**, **page 189**, and select one according to the applicable motor capacity.) When connecting a DC reactor, if a jumper is installed across terminals P1 and P/+, remove the jumper before installing the DC reactor. The IP55 compatible model has a built-in DC reactor. (The jumper is not installed for the FR-A820-03800(75K) or higher and the FR-A840-02160(75K) or higher.)

*2 When using separate power supply for the control circuit, remove the jumper between R1/L11 and S1/L21. IP55 compatible models do not have terminals R1/L11, S1/L21, and jumpers.

*3 Terminal functions can be changed using the Input terminal function selection (**Pr.178 to Pr.189**).

*4 Terminal JOG is also used as a pulse train input terminal. Use **Pr.291** to choose JOG or pulse.

*5 Terminal input specifications can be changed by analog input specification switchover (**Pr.73, Pr.267**). To input a voltage, set the voltage/current input switch OFF. To input a current, set the voltage/current input switch ON. Terminals 10 and 2 are also used as a PTC input terminal. **(Pr.561)**

*6 It is recommended to use 2 W 1 kΩ when the frequency setting signal is changed frequently.

*7 If connecting a brake resistor, remove the jumper between PR and PX (FR-A820-00046(0.4K) to 00490(7.5K), FR-A840-00023(0.4K) to 00250(7.5K)).

*8 Connect a brake resistor across terminals P/+ (P3) and PR. (Terminal PR is equipped in FR-A820-00046(0.4K) to 01250(22K), FR-A840-00023(0.4K) to 01800(55K).) Install a thermal relay to prevent overheating and damage of brake resistors.

*9 Connect only a brake resistor to terminal P3.

*10 Terminal functions can be changed using the Output terminal function selection (**Pr.195, Pr.196**).

*11 Terminal functions can be changed using the Output terminal function selection (**Pr.190 to Pr.194**).

*12 The option connector 2 cannot be used because the Ethernet board is installed in the initial status. The Ethernet board must be removed to install a plug-in option to the option connector 2. (However, Ethernet communication is disabled in that case.)

*13 Do not change the initially set ON (enabled) position of the EMC filter ON/OFF connector in the case of the inverter with a built-in C2 filter (IP55 compatible model). The Class C2 compatibility condition is not satisfied with the EMC filter OFF. The FR-A846-00250(7.5K)-C2 to FR-A846-00470(18.5K)-C2 are not provided with the EMC filter ON/OFF connector. The EMC filter is always ON.

Standard models (FR-A800-GF, FR-A800-GN)

FM type

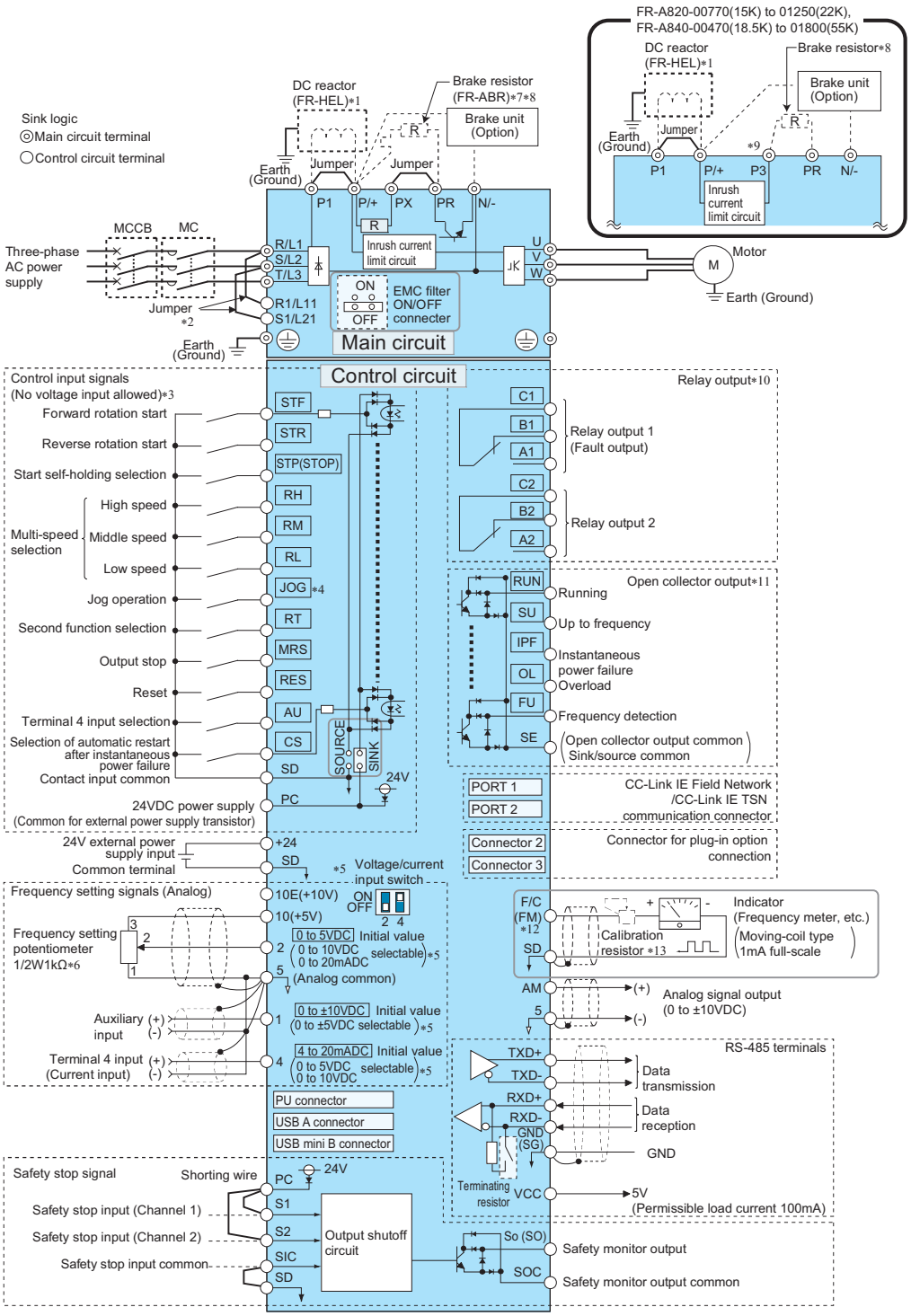

*1 For the FR-A820-03800(75K) or higher, the FR-A840-02160(75K) or higher, and when a 75 kW or higher motor is used, always connect a DC reactor (FR-HEL), which is available as an option. (To select a DC reactor, refer to **page 37**, **page 189**, and select one according to the applicable motor capacity.) When connecting a DC reactor, if a jumper is installed across terminals P1 and P/+, remove the jumper before installing the DC reactor. (The jumper is not installed for the FR-A820-03800(75K) or higher and the FR-A840-02160(75K) or higher.)

*2 When using separate power supply for the control circuit, remove the jumper between R1/L11 and S1/L21.

*3 Terminal functions can be changed using the Input terminal function selection (**Pr.178 to Pr.189**).

*4 Terminal JOG is also used as a pulse train input terminal. Use **Pr.291** to choose JOG or pulse.

*5 Terminal input specifications can be changed by analog input specification switchover (**Pr.73, Pr.267**). To input a voltage, set the voltage/current input switch OFF. To input a current, set the voltage/current input switch ON. Terminals 10 and 2 are also used as a PTC input terminal. (**Pr.561**)

*6 It is recommended to use 2 W 1 kΩ when the frequency setting signal is changed frequently.

*7 If connecting a brake resistor, remove the jumper between PR and PX (FR-A820-00046(0.4K) to 00490(7.5K), FR-A840-00023(0.4K) to 00250(7.5K)).

*8 Connect a brake resistor across terminals P/+ (P3) and PR. (Terminal PR is equipped in FR-A820-00046(0.4K) to 01250(22K), FR-A840-00023(0.4K) to 01800(55K).) Install a thermal relay to prevent overheating and damage of brake resistors.

*9 Connect only a brake resistor to terminal P3.

*10 Terminal functions can be changed using the Output terminal function selection (**Pr.195, Pr.196**).

*11 Terminal functions can be changed using the Output terminal function selection (**Pr.190 to Pr.194**).

*12 Terminal F/C (FM) can be used to output pulse trains as open collector output by setting **Pr.291**.

*13 Not required when calibrating the scale with the operation panel.

◆ **CA type**

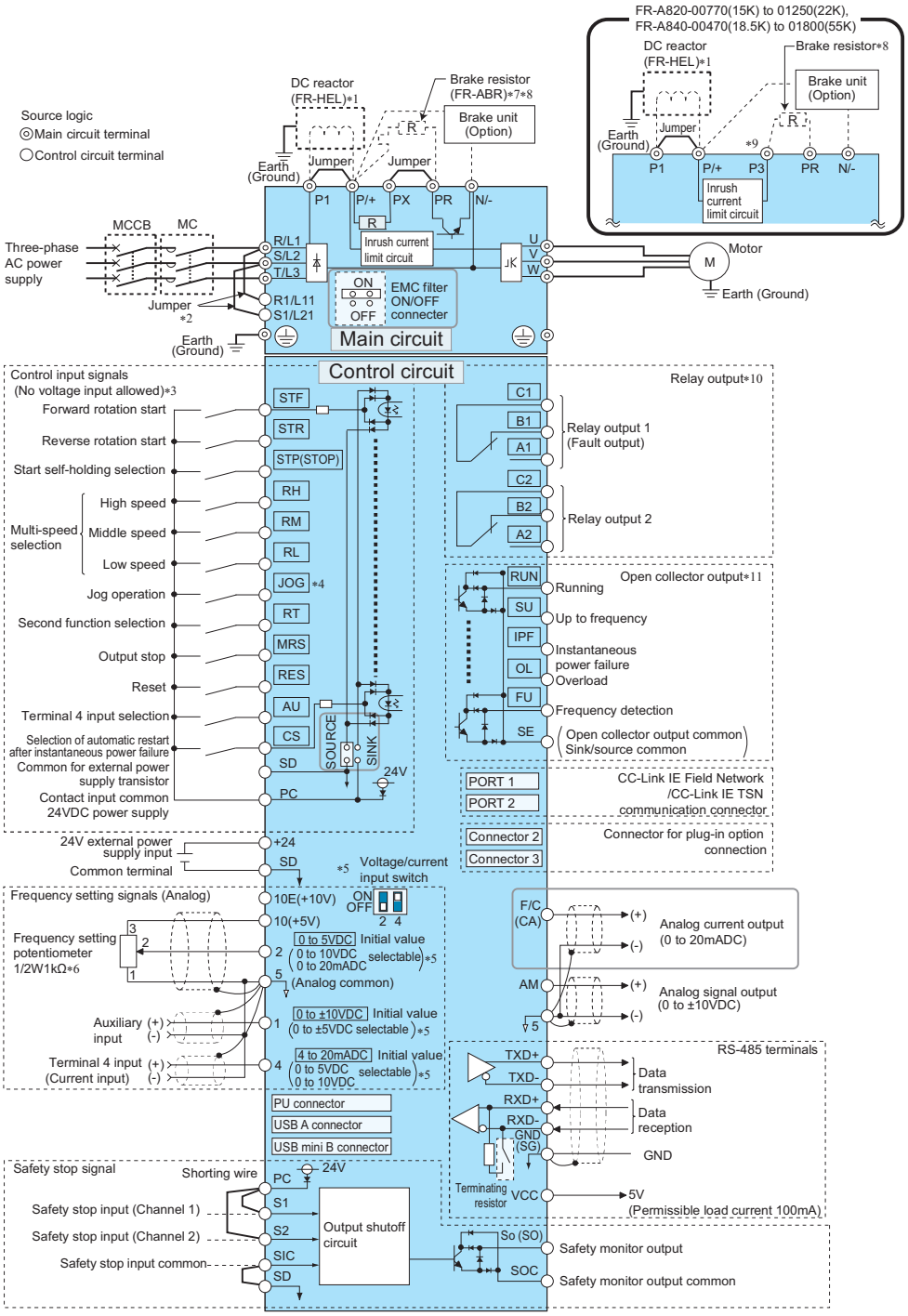

*1 For the FR-A820-03800(75K) or higher, the FR-A840-02160(75K) or higher, and when a 75 kW or higher motor is used, always connect a DC reactor (FR-HEL), which is available as an option. (To select a DC reactor, refer to **page 37**, **page 189**, and select one according to the applicable motor capacity.) When connecting a DC reactor, if a jumper is installed across terminals P1 and P/+, remove the jumper before installing the DC reactor. (The jumper is not installed for the FR-A820-03800(75K) or higher and the FR-A840-02160(75K) or higher.)

*2 When using separate power supply for the control circuit, remove the jumper between R1/L11 and S1/L21.

*3 Terminal functions can be changed using the Input terminal function selection (**Pr.178 to Pr.189**).

*4 Terminal JOG is also used as a pulse train input terminal. Use **Pr.291** to choose JOG or pulse.

*5 Terminal input specifications can be changed by analog input specification switchover (**Pr.73, Pr.267**). To input a voltage, set the voltage/current input switch OFF. To input a current, set the voltage/current input switch ON. Terminals 10 and 2 are also used as a PTC input terminal. (**Pr.561**)

*6 It is recommended to use 2 W 1 kΩ when the frequency setting signal is changed frequently.

*7 If connecting a brake resistor, remove the jumper between PR and PX (FR-A820-00046(0.4K) to 00490(7.5K), FR-A840-00023(0.4K) to 00250(7.5K)).

*8 Connect a brake resistor across terminals P/+ (P3) and PR. (Terminal PR is equipped in FR-A820-00046(0.4K) to 01250(22K), FR-A840-00023(0.4K) to 01800(55K).) Install a thermal relay to prevent overheating and damage of brake resistors.

*9 Connect only a brake resistor to terminal P3.

*10 Terminal functions can be changed using the Output terminal function selection (**Pr.195, Pr.196**).

*11 Terminal functions can be changed using the Output terminal function selection (**Pr.190 to Pr.194**).

Separated converter type (FR-A842-P)

FM type

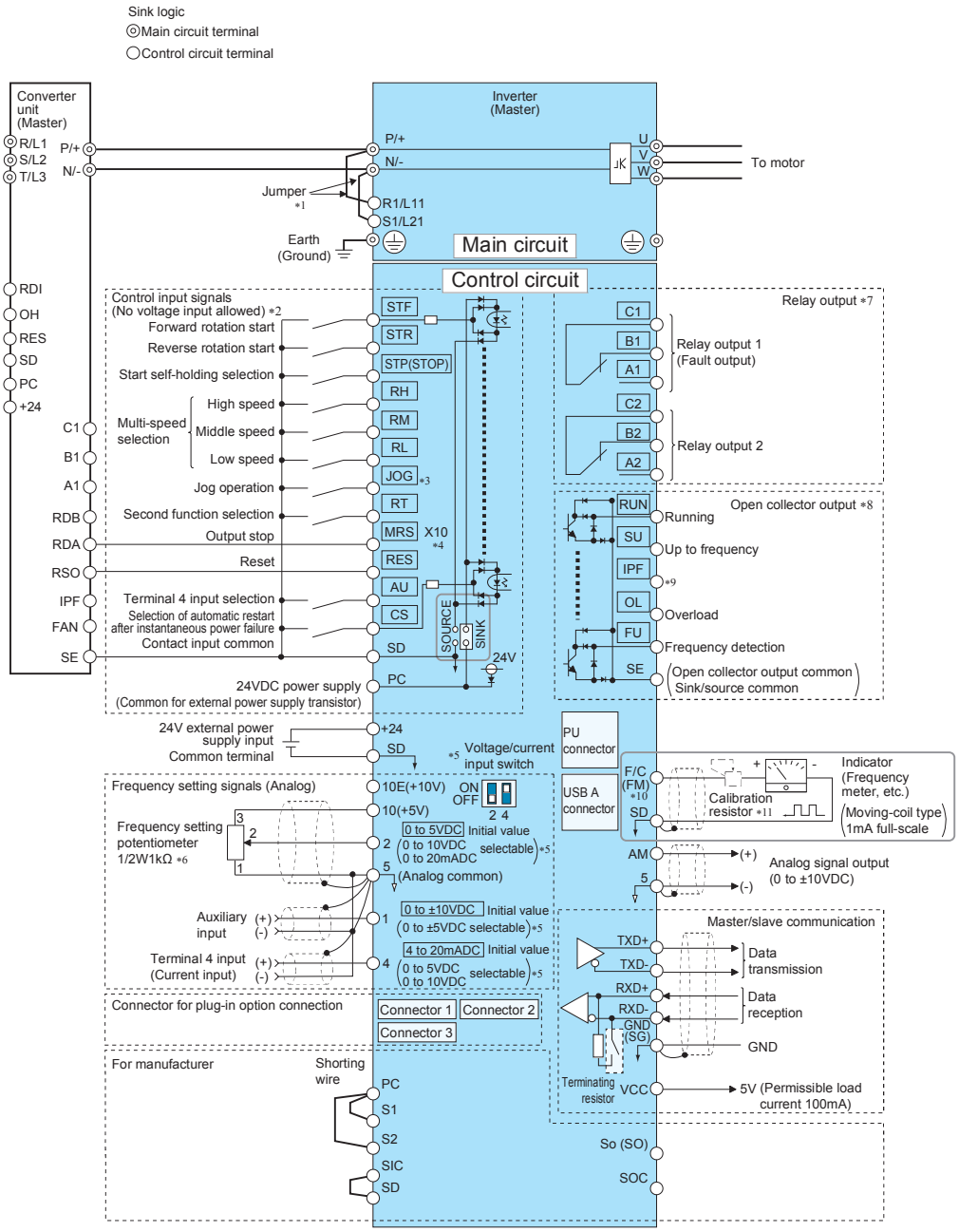

*1 Terminals R1/L11 and S1/L21 are connected to terminals P/+ and N/- with a jumper respectively. When using separate power supply for the control circuit, remove the jumpers from R1/L11 and S1/L21.
*2 Terminal functions can be changed using the Input terminal function selection (**Pr.178 to Pr.189**).
*3 Terminal JOG is also used as the pulse train input terminal. Use **Pr.291** to choose JOG or pulse.
*4 The X10 signal (NC contact input specification) is assigned to terminal MRS in the initial setting. Set **Pr.599** = "0" to change the input specification of the X10 signal to NO contact.
*5 Terminal input specifications can be changed by analog input specification switchover (**Pr.73, Pr.267**). To input a voltage (0 to 5 V/0 to 10 V), set the voltage/current input switch OFF. To input a current (4 to 20 mA), set the voltage/current input switch ON. Terminals 10 and 2 are also used as a PTC input terminal. (**Pr.561**)
*6 It is recommended to use 2 W 1 kΩ when the frequency setting signal is changed frequently.
*7 Terminal functions can be changed using the Output terminal function selection (**Pr.195, Pr.196**).
*8 Terminal functions can be changed using the Output terminal function selection (**Pr.190 to Pr.194**).
*9 No function is assigned in the initial setting. Use **Pr.192** for function assignment.
*10 Terminal F/C (FM) can be used to output pulse trains as open collector output by setting **Pr.291**.
*11 Not required when calibrating the scale with the operation panel.

NOTE

- For the system configuration for the parallel operation, refer to the FR-A802-P Instruction Manual (Hardware).

Converter unit (FR-CC2-P)

◆ When the sink logic is selected

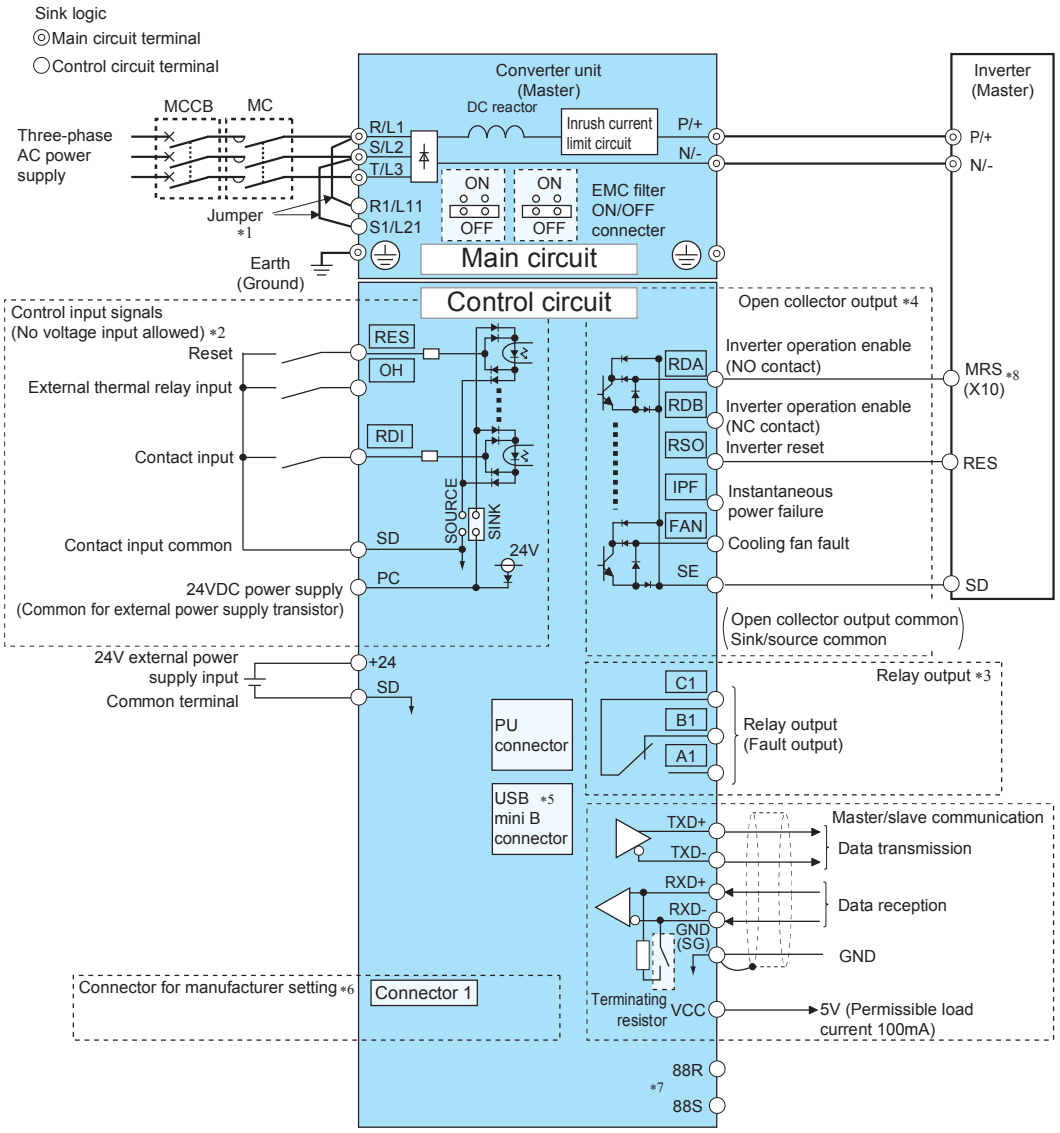

*1 When using separate power supply for the control circuit, remove the jumpers from R1/L11 and S1/L21.
*2 Terminal functions can be changed using the Input terminal function selection (**Pr.178, Pr.187, Pr.189**).
*3 Terminal functions can be changed using the Output terminal function selection (**Pr.195**).
*4 Terminal functions can be changed using the Output terminal function selection (**Pr.190 to Pr.194**).
*5 The connector is for manufacturer setting. Do not use.
*6 Plug-in options cannot be used.
*7 For manufacturer setting. Do not use.
*8 To use the RDA signal of the converter unit, select the NC contact input specification for the input logic of MRS signal or X10 signal of the inverter.
To use the RDB signal of the converter unit, select the NO contact input specification for the input logic of MRS signal or X10 signal of the inverter. (For changing the input logic, refer to the Instruction Manual of the inverter.)

NOTE

- For the system configuration for the parallel operation, refer to the FR-CC2-P Instruction Manual.

Standard models (FR-A800-F)

FM type

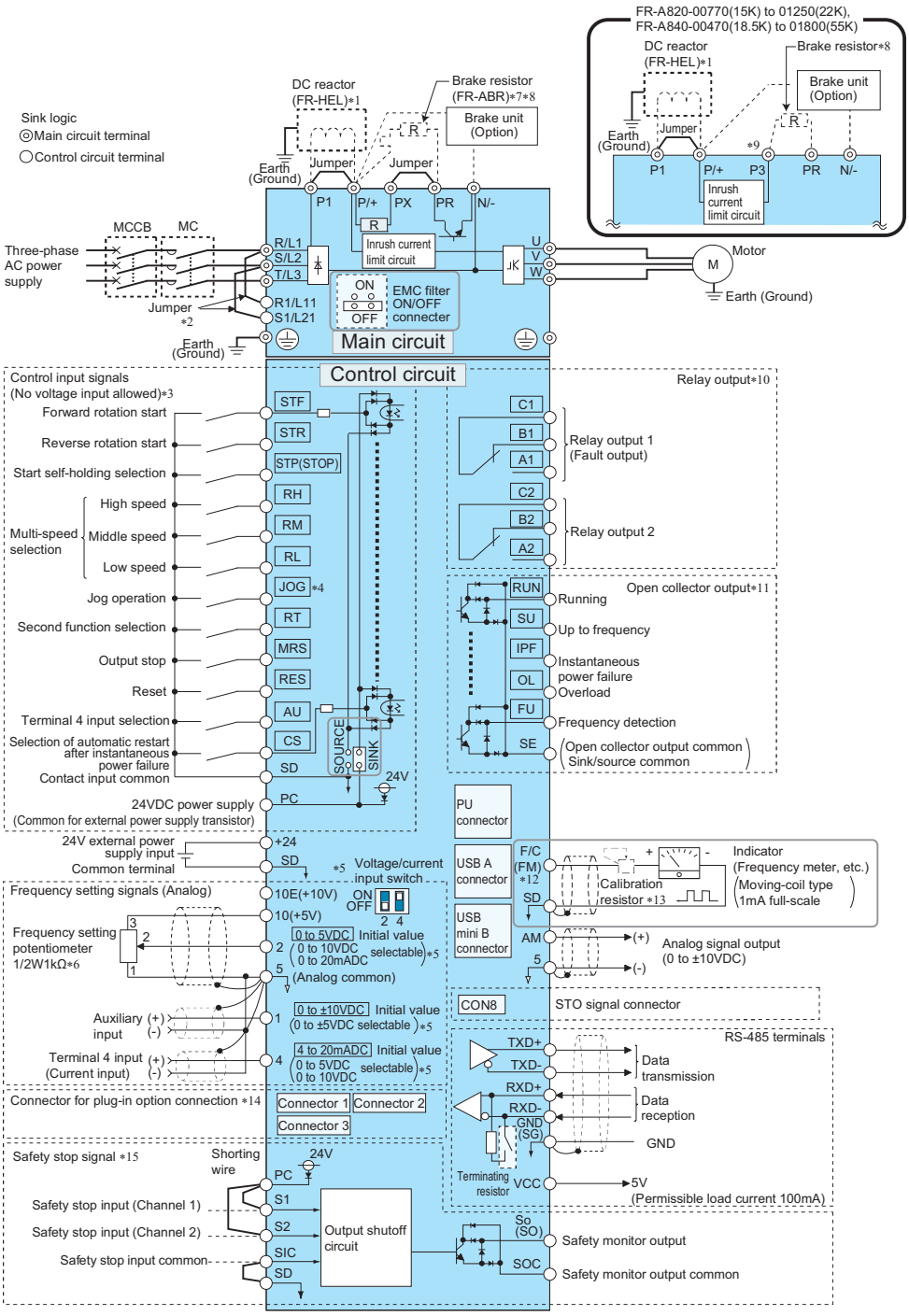

*1 For the FR-A820-03800(75K) or higher, the FR-A840-02160(75K) or higher, and when a 75 kW or higher motor is used, always connect a DC reactor (FR-HEL), which is available as an option. (To select a DC reactor, refer to **page 37**, **page 189**, and select one according to the applicable motor capacity.) When connecting a DC reactor, if a jumper is installed across terminals P1 and P/+, remove the jumper before installing the DC reactor. (The jumper is not installed for the FR-A820-03800(75K) or higher and the FR-A840-02160(75K) or higher.)

*2 When using separate power supply for the control circuit, remove the jumper between R1/L11 and S1/L21.

*3 Terminal functions can be changed using the Input terminal function selection (**Pr.178 to Pr.189**).

*4 Terminal JOG is also used as the pulse train input terminal. Use **Pr.291** to choose JOG or pulse.

*5 Terminal input specifications can be changed by analog input specification switchover **(Pr.73, Pr.267)**. To input a voltage, set the voltage/current input switch OFF. To input a current, set the voltage/current input switch ON. Terminals 10 and 2 are also used as a PTC input terminal. **(Pr.561)**

*6 It is recommended to use 2 W 1 kΩ when the frequency setting signal is changed frequently.

*7 If connecting a brake resistor, remove the jumper between PR and PX (FR-A820-00046(0.4K) to 00490(7.5K), FR-A840-00023(0.4K) to 00250(7.5K)).

*8 Connect a brake resistor across terminals P/+ (P3) and PR. (Terminal PR is equipped in FR-A820-00046(0.4K) to 01250(22K), FR-A840-00023(0.4K) to 01800(55K).) Install a thermal relay to prevent overheating and damage of brake resistors.

*9 Connect only a brake resistor to terminal P3.

*10 Terminal functions can be changed using the Output terminal function selection (**Pr.195, Pr.196**).

*11 Terminal functions can be changed using the Output terminal function selection (**Pr.190 to Pr.194**).

*12 Terminal F/C (FM) can be used to output pulse trains as open collector output by setting **Pr.291**.

*13 Not required when calibrating the scale with the operation panel.

*14 When the FR-A8NCG-S is installed, other options can be connected to the connectors 2 and 3. For the options available when the safety communication option is installed, refer to the Instruction Manual.

*15 Do not remove the jumpers from terminals S1, S2, and SIC. Do not use terminals S1, S2, SIC, and So (SO).

Separated converter type (FR-A802-F)

FM type

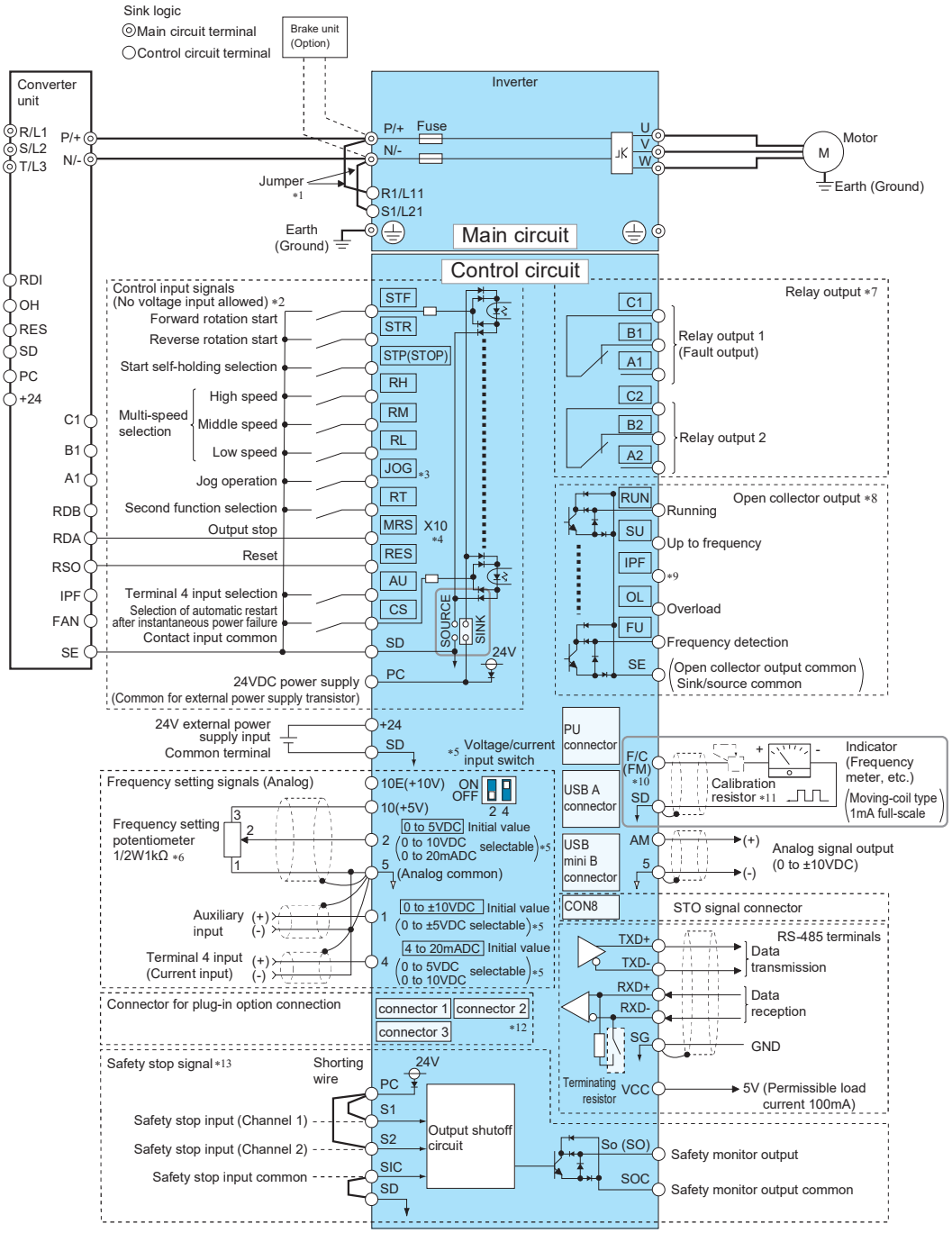

*1 A jumper is installed across terminal R1/L11 and terminal P/+, and across terminal S1/L21 and terminal N/-. When using a separate power supply for the control circuit, remove the jumpers connected to terminals R1/L11 and S1/L21.
*2 Terminal functions can be changed using the Input terminal function selection (**Pr.178 to Pr.189**).
*3 Terminal JOG is also used as a pulse train input terminal. Use **Pr.291** to choose JOG or pulse.
*4 The X10 signal (NC contact input specification) is assigned to terminal MRS in the initial setting. Set **Pr.599** = "0" to change the input specification of the X10 signal to NO contact.
*5 Terminal input specifications can be changed by analog input specification switchover (**Pr.73, Pr.267**). To input voltage (0 to 5 V/0 to 10 V), set the voltage/current input switch OFF. To input current (4 to 20 mA), set the voltage/current input switch ON. Terminals 10 and 2 are also used as a PTC input terminal. **(Pr.561)**
*6 It is recommended to use 2 W 1 kΩ when the frequency setting signal is changed frequently.
*7 Terminal functions can be changed using the Output terminal function selection (**Pr.195, Pr.196**).
*8 Terminal functions can be changed using the Output terminal function selection (**Pr.190 to Pr.194**).
*9 No function is assigned in the initial setting. Use **Pr.192** for function assignment.
*10 Terminal FM can be used to output pulse trains as open collector output by setting **Pr.291**.
*11 Not required when calibrating the scale with the operation panel.
*12 When the FR-A8NCG-S is installed, other options can be connected to the connectors 2 and 3. For the options available when the safety communication option is installed, refer to the Instruction Manual.
*13 Do not remove the jumpers from terminals S1, S2, and SIC. Do not use terminals S1, S2, SIC, and So (SO).

Slim model (FR-A840M)

◆ FM type

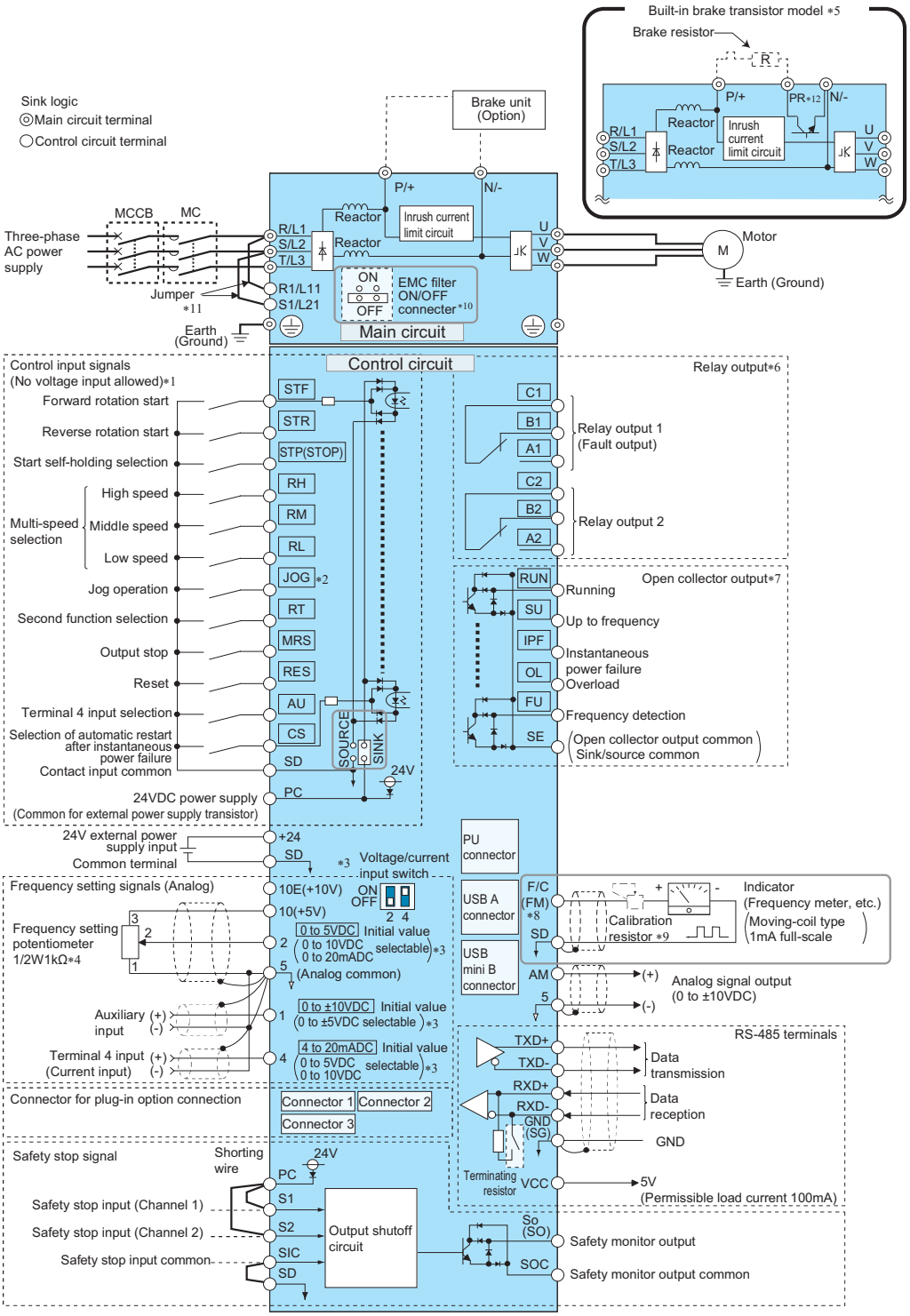

*1 Terminal functions can be changed using the Input terminal function selection (**Pr.178 to Pr.189**).
*2 Terminal JOG is also used as the pulse train input terminal. Use **Pr.291** to choose JOG or pulse.
*3 Terminal input specifications can be changed by analog input specification switchover **(Pr.73, Pr.267)**. To input a voltage, set the voltage/current input switch OFF. To input a current, set the voltage/current input switch ON. Terminals 10 and 2 are also used as a PTC input terminal. **(Pr.561)**
*4 It is recommended to use 2 W 1 kΩ when the frequency setting signal is changed frequently.
*5 Connect a brake resistor to terminals P/+ and PR (built-in brake transistor model only). Install a thermal relay to prevent overheating and damage of the brake resistor.
*6 Terminal functions can be changed using the Output terminal function selection (**Pr.195, Pr.196**).
*7 Terminal functions can be changed using the Output terminal function selection (**Pr.190 to Pr.194**).
*8 Terminal F/C (FM) can be used to output pulse trains as open collector output by setting **Pr.291**.
*9 Not required when calibrating the scale with the operation panel.
*10 Do not change the initially set ON (enabled) position of the EMC filter ON/OFF connector in the case of the inverter with a built-in C2 filter. The Class C2 compatibility condition is not satisfied with the EMC filter OFF.
*11 When using separate power supply for the control circuit, remove the jumper between R1/L11 and S1/L21.
*12 Terminal PR is provided for the built-in brake transistor model only.

◆ **CA type**

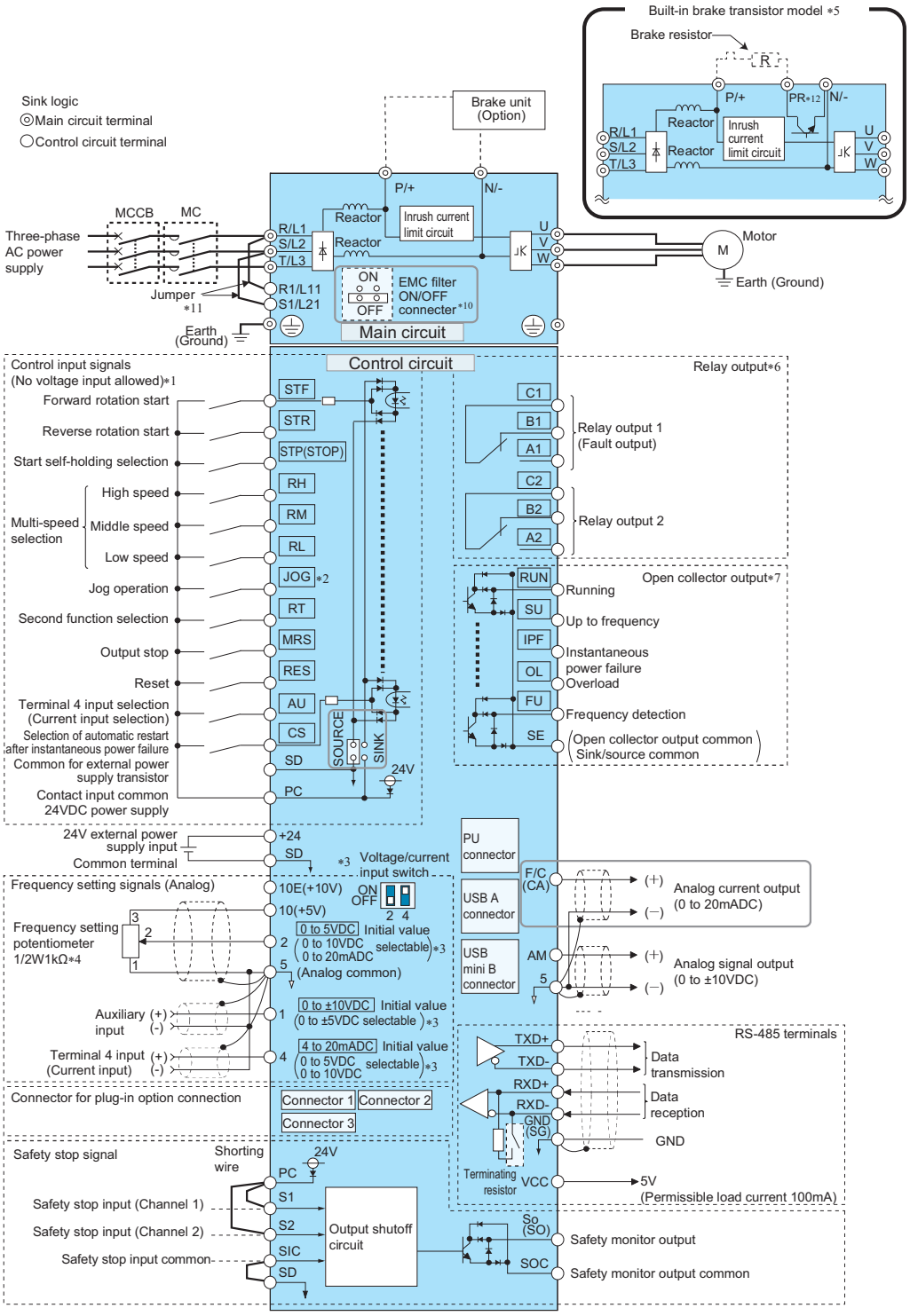

*1 Terminal functions can be changed using the Input terminal function selection (**Pr.178 to Pr.189**).
*2 Terminal JOG is also used as the pulse train input terminal. Use **Pr.291** to choose JOG or pulse.
*3 Terminal input specifications can be changed by analog input specification switchover **(Pr.73, Pr.267)**. To input a voltage, set the voltage/current input switch OFF. To input a current, set the voltage/current input switch ON. Terminals 10 and 2 are also used as a PTC input terminal. **(Pr.561)**
*4 It is recommended to use 2 W 1 kΩ when the frequency setting signal is changed frequently.
*5 Connect a brake resistor to terminals P/+ and PR (built-in brake transistor model only). Install a thermal relay to prevent overheating and damage of the brake resistor.
*6 Terminal functions can be changed using the Output terminal function selection (**Pr.195, Pr.196**).
*7 Terminal functions can be changed using the Output terminal function selection (**Pr.190 to Pr.194**).
*8 Do not change the initially set ON (enabled) position of the EMC filter ON/OFF connector in the case of the inverter with a built-in C2 filter. The Class C2 compatibility condition is not satisfied with the EMC filter OFF.
*9 When using separate power supply for the control circuit, remove the jumper between R1/L11 and S1/L21.
*10 Terminal PR is provided for the built-in brake transistor model only.

Slim model (FR-A840M-E)

◆ FM type

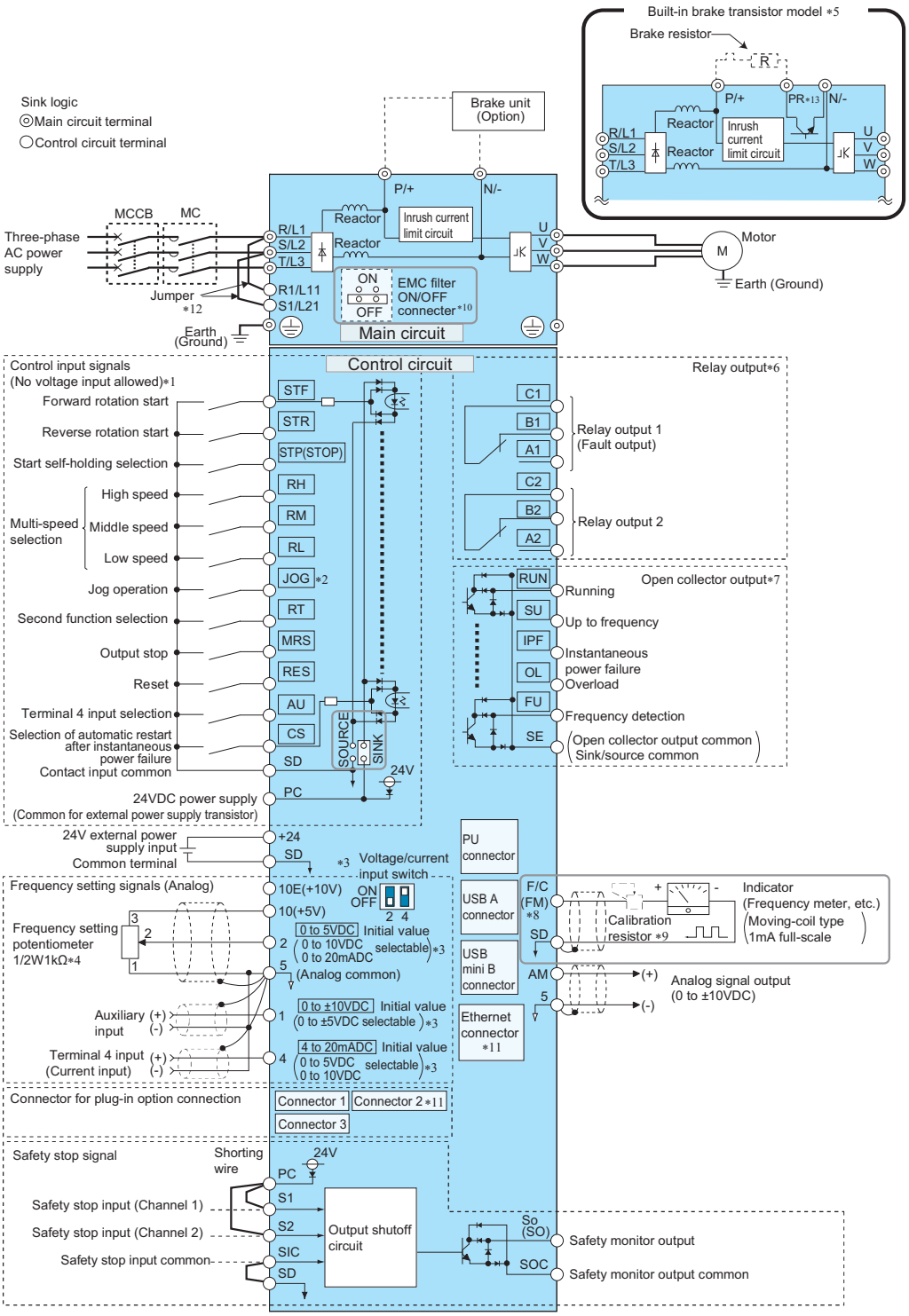

*1 Terminal functions can be changed using the Input terminal function selection (**Pr.178 to Pr.189**).
*2 Terminal JOG is also used as the pulse train input terminal. Use **Pr.291** to choose JOG or pulse.
*3 Terminal input specifications can be changed by analog input specification switchover **(Pr.73, Pr.267)**. To input a voltage, set the voltage/current input switch OFF. To input a current, set the voltage/current input switch ON. Terminals 10 and 2 are also used as a PTC input terminal. **(Pr.561)**
*4 It is recommended to use 2 W 1 kΩ when the frequency setting signal is changed frequently.
*5 Connect a brake resistor to terminals P/+ and PR (built-in brake transistor model only). Install a thermal relay to prevent overheating and damage of the brake resistor.
*6 Terminal functions can be changed using the Output terminal function selection (**Pr.195, Pr.196**).
*7 Terminal functions can be changed using the Output terminal function selection (**Pr.190 to Pr.194**).
*8 Terminal F/C (FM) can be used to output pulse trains as open collector output by setting **Pr.291**.
*9 Not required when calibrating the scale with the operation panel.
*10 Do not change the initially set ON (enabled) position of the EMC filter ON/OFF connector in the case of the inverter with a built-in C2 filter. The Class C2 compatibility condition is not satisfied with the EMC filter OFF.
*11 The option connector 2 cannot be used because the Ethernet board is installed in the initial status. The Ethernet board must be removed to install a plug-in option to the option connector 2. (However, Ethernet communication is disabled in that case.)
*12 When using separate power supply for the control circuit, remove the jumper between R1/L11 and S1/L21.
*13 Terminal PR is provided for the built-in brake transistor model only.

◆ **CA type**

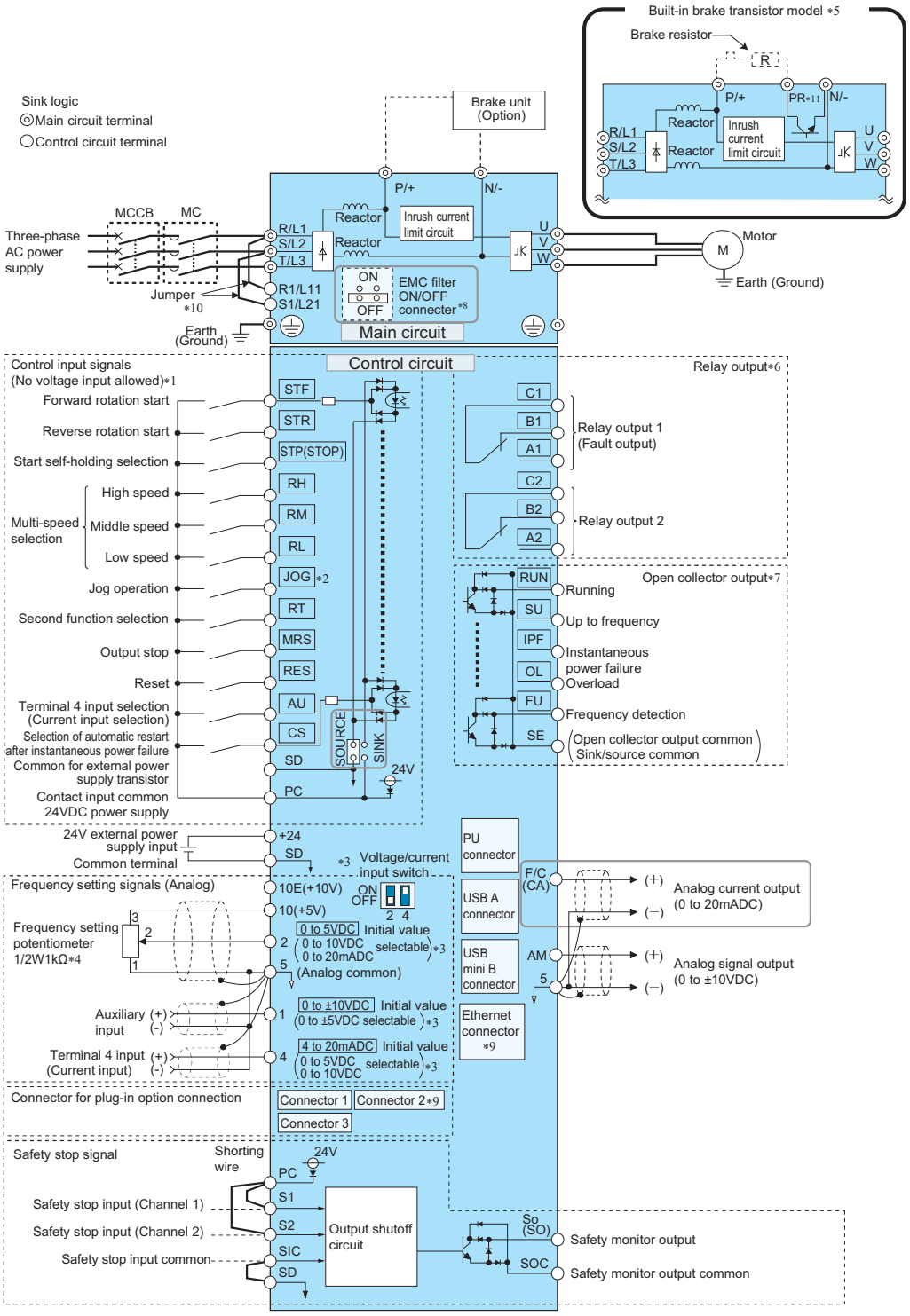

*1 Terminal functions can be changed using the Input terminal function selection (**Pr.178 to Pr.189**).
*2 Terminal JOG is also used as the pulse train input terminal. Use **Pr.291** to choose JOG or pulse.
*3 Terminal input specifications can be changed by analog input specification switchover **(Pr.73, Pr.267)**. To input a voltage, set the voltage/current input switch OFF. To input a current, set the voltage/current input switch ON. Terminals 10 and 2 are also used as a PTC input terminal. **(Pr.561)**
*4 It is recommended to use 2 W 1 kΩ when the frequency setting signal is changed frequently.
*5 Connect a brake resistor to terminals P/+ and PR (built-in brake transistor model only). Install a thermal relay to prevent overheating and damage of the brake resistor.
*6 Terminal functions can be changed using the Output terminal function selection (**Pr.195, Pr.196**).
*7 Terminal functions can be changed using the Output terminal function selection (**Pr.190 to Pr.194**).
*8 Do not change the initially set ON (enabled) position of the EMC filter ON/OFF connector in the case of the inverter with a built-in C2 filter. The Class C2 compatibility condition is not satisfied with the EMC filter OFF.
*9 The option connector 2 cannot be used because the Ethernet board is installed in the initial status. The Ethernet board must be removed to install a plug-in option to the option connector 2. (However, Ethernet communication is disabled in that case.)
*10 When using separate power supply for the control circuit, remove the jumper between R1/L11 and S1/L21.
*11 Terminal PR is provided for the built-in brake transistor model only.

Slim model (separated converter type) (FR-A842M)

◆ FM type

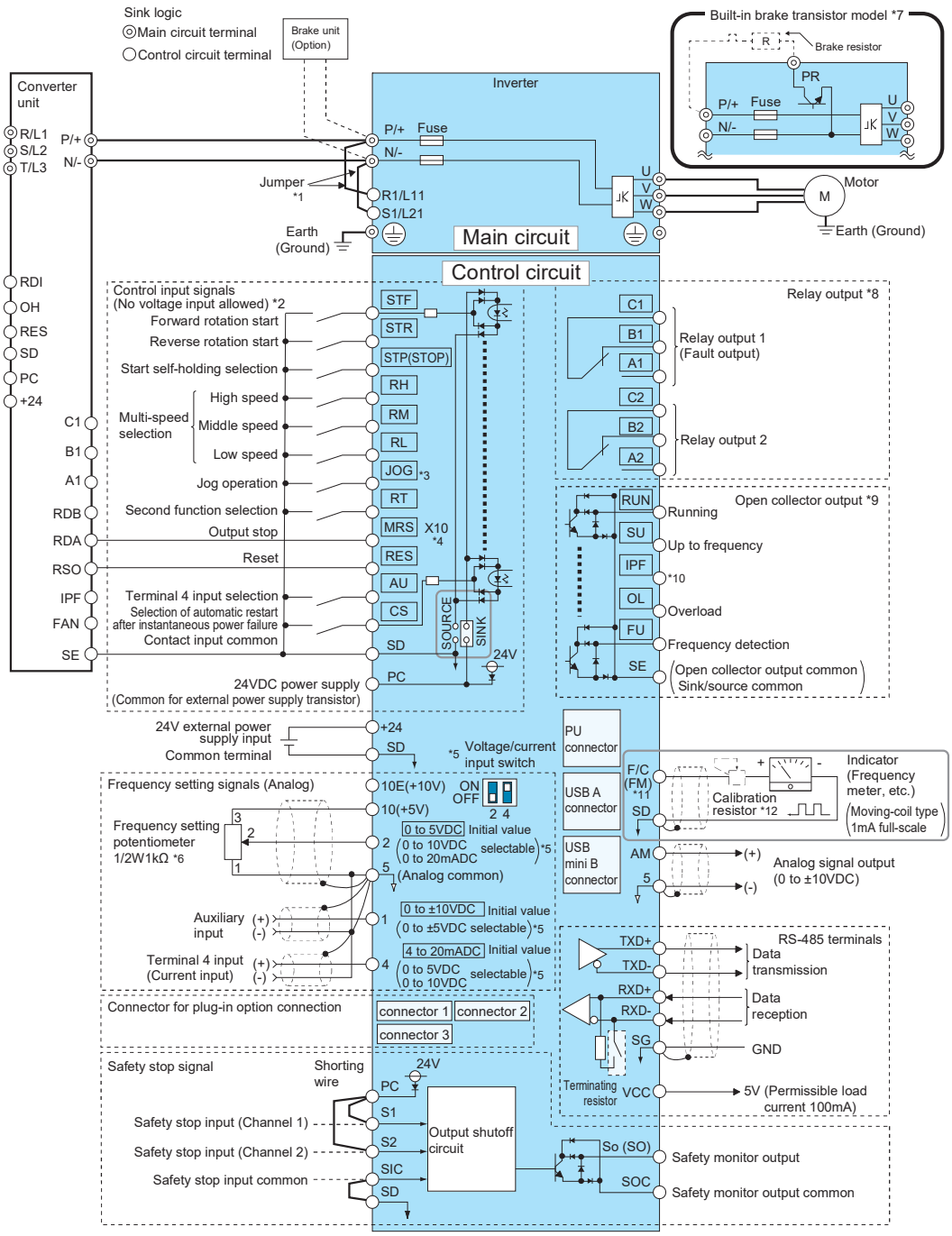

*1 A jumper is installed across terminal R1/L11 and terminal P/+, and across terminal S1/L21 and terminal N/-. When using a separate power supply for the control circuit, remove the jumpers connected to terminals R1/L11 and S1/L21.
*2 Terminal functions can be changed using the Input terminal function selection (**Pr.178 to Pr.189**).
*3 Terminal JOG is also used as a pulse train input terminal. Use **Pr.291** to choose JOG or pulse.
*4 The X10 signal (NC contact input specification) is assigned to the terminal MRS in the initial setting. Set **Pr.599** = "0" to change the input specification of the X10 signal to NO contact.
*5 Terminal input specifications can be changed by analog input specification switchover (**Pr.73, Pr.267**). To input voltage (0 to 5 V/0 to 10 V), set the voltage/current input switch OFF. To input current (4 to 20 mA), set the voltage/current input switch ON. Terminals 10 and 2 are also used as a PTC input terminal. **(Pr.561)**
*6 It is recommended to use 2 W 1 kΩ when the frequency setting signal is changed frequently.
*7 For the built-in brake transistor model, connect a brake resistor across terminals P/+ and PR. To prevent overheating and damage of brake resistors, select a brake resistor that meets the specifications and install a thermal relay.
*8 Terminal functions can be changed using the Output terminal function selection (**Pr.195, Pr.196**).
*9 Terminal functions can be changed using the Output terminal function selection (**Pr.190 to Pr.194**).
*10 No function is assigned in the initial setting. Use **Pr.192** for function assignment.
*11 Terminal FM can be used to output pulse trains as open collector output by setting **Pr.291**.
*12 Not required when calibrating the scale with the operation panel.

Slim model (separated converter type) (FR-A842M-E)

◆ FM type

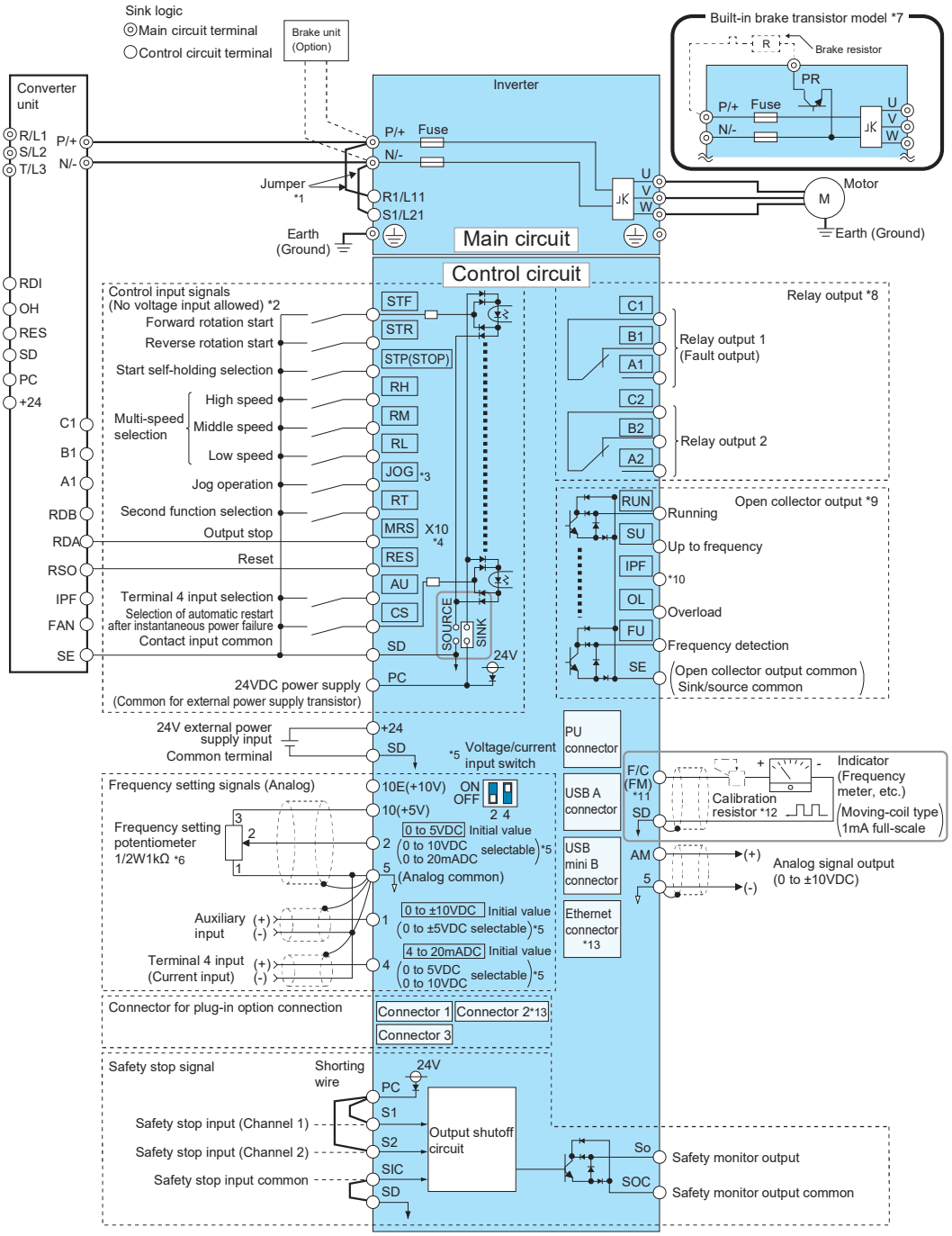

*1 A jumper is installed across terminal R1/L11 and terminal P/+, and across terminal S1/L21 and terminal N/-. When using a separate power supply for the control circuit, remove the jumpers connected to terminals R1/L11 and S1/L21.
*2 Terminal functions can be changed using the Input terminal function selection (**Pr.178 to Pr.189**).
*3 Terminal JOG is also used as a pulse train input terminal. Use **Pr.291** to choose JOG or pulse.
*4 The X10 signal (NC contact input specification) is assigned to the terminal MRS in the initial setting. Set **Pr.599** = "0" to change the input specification of the X10 signal to NO contact.
*5 Terminal input specifications can be changed by analog input specification switchover (**Pr.73, Pr.267**). To input voltage (0 to 5 V/0 to 10 V), set the voltage/current input switch OFF. To input current (4 to 20 mA), set the voltage/current input switch ON. Terminals 10 and 2 are also used as a PTC input terminal. **(Pr.561)**
*6 It is recommended to use 2 W 1 kΩ when the frequency setting signal is changed frequently.
*7 For the built-in brake transistor model, connect a brake resistor across terminals P/+ and PR. To prevent overheating and damage of brake resistors, select a brake resistor that meets the specifications and install a thermal relay.
*8 Terminal functions can be changed using the Output terminal function selection (**Pr.195, Pr.196**).
*9 Terminal functions can be changed using the Output terminal function selection (**Pr.190 to Pr.194**).
*10 No function is assigned in the initial setting. Use **Pr.192** for function assignment.
*11 Terminal FM can be used to output pulse trains as open collector output by setting **Pr.291**.
*12 Not required when calibrating the scale with the operation panel.
*13 The option connector 2 cannot be used because the Ethernet board is installed in the initial status. The Ethernet board must be removed to install a plug-in option to the option connector 2. (However, Ethernet communication is disabled in that case.)

Slim model (converter unit) (FR-CC2M)

◆ When the sink logic is selected

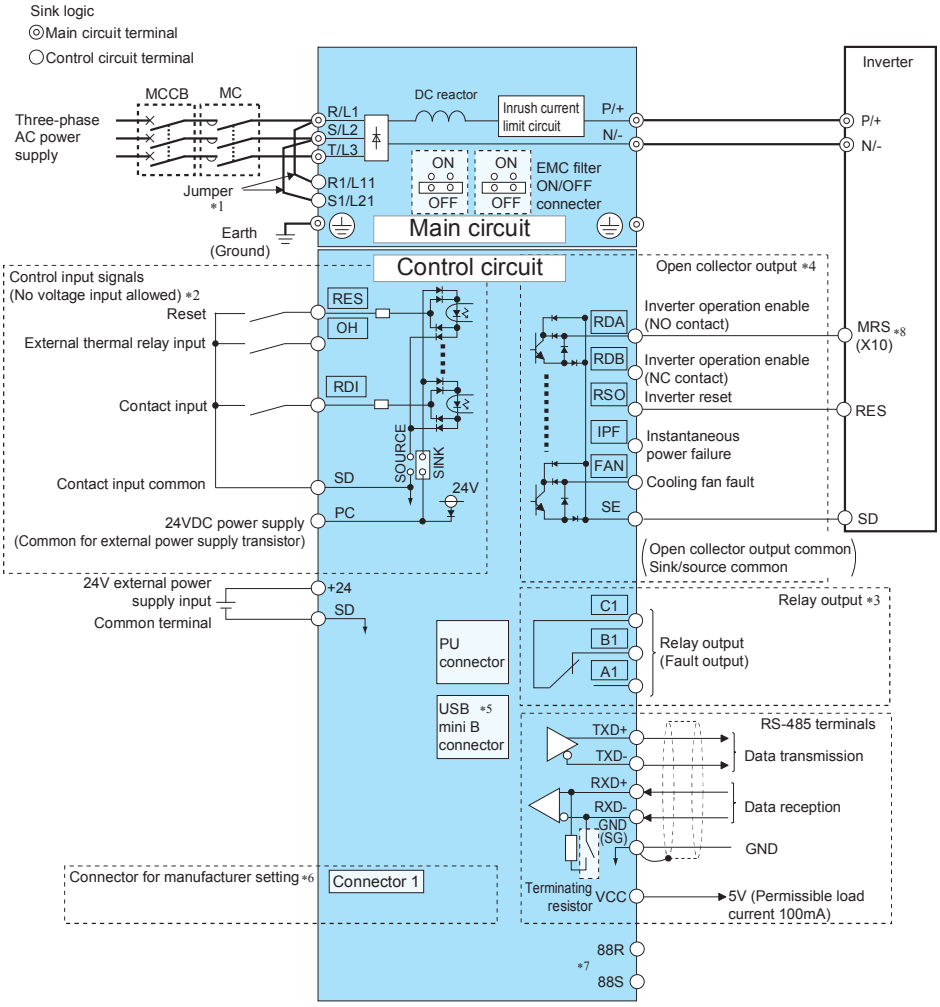

*1 To use separate power supply for the control circuit, remove each jumper at terminal R1/L11 and terminal S1/L21.
*2 Terminal functions can be changed using the Input terminal function selection (**Pr.178, Pr.187, Pr.189**).
*3 Terminal functions can be changed using the Output terminal function selection (**Pr.195**).
*4 Terminal functions can be changed using the Output terminal function selection (**Pr.190 to Pr.194**).
*5 This connector is for manufacturer setting. Do not use.
*6 Plug-in options cannot be used.
*7 For manufacturer setting. Do not use.
*8 To use the RDA signal of the converter unit, select the normally-closed contact input specification for the input logic of the MRS signal or X10 signal of the inverter.
To use the RDB signal of the converter unit, select the normally-open contact input specification for the input logic of the MRS signal or X10 signal of the inverter.
(For changing the input logic, refer to the Instruction Manual of the inverter.)

Connection of motor with encoder (vector control) (when the sink logic is selected and the FR-A8AP is used)

◆ Speed control

Standard motor with encoder (SF-JR) and 5 V differential line driver	Vector control dedicated motor (SF-V5RU, SF-THY) and 12 V complementary
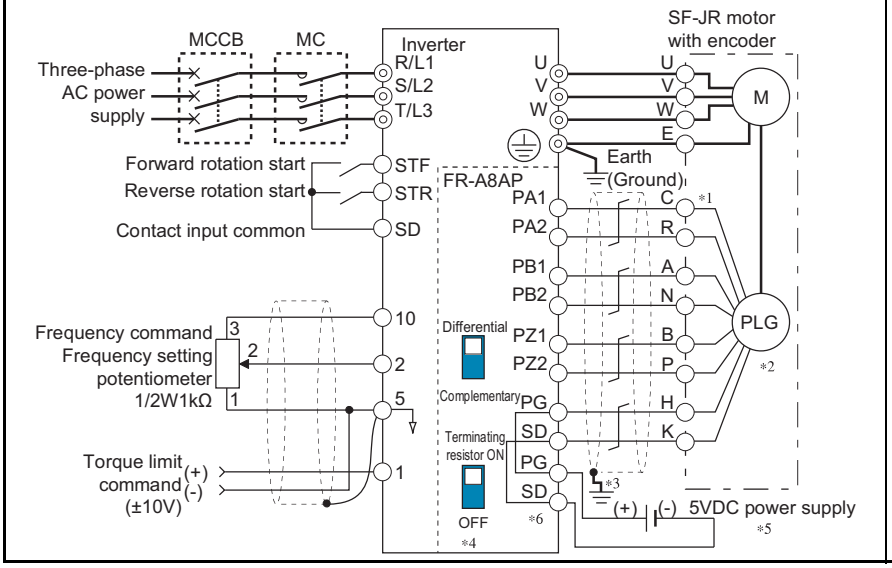	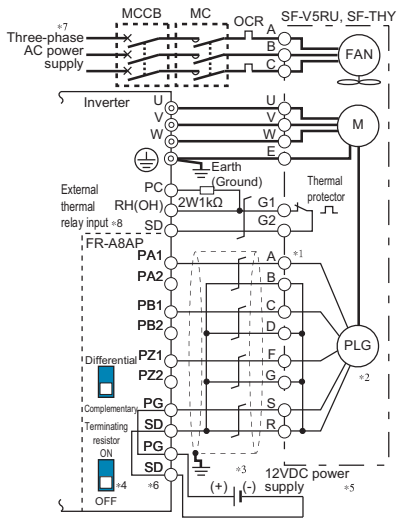

◆ Torque control

Standard motor with encoder (SF-JR) and 5 V differential line driver	Vector control dedicated motor (SF-V5RU, SF-THY) and 12 V complementary
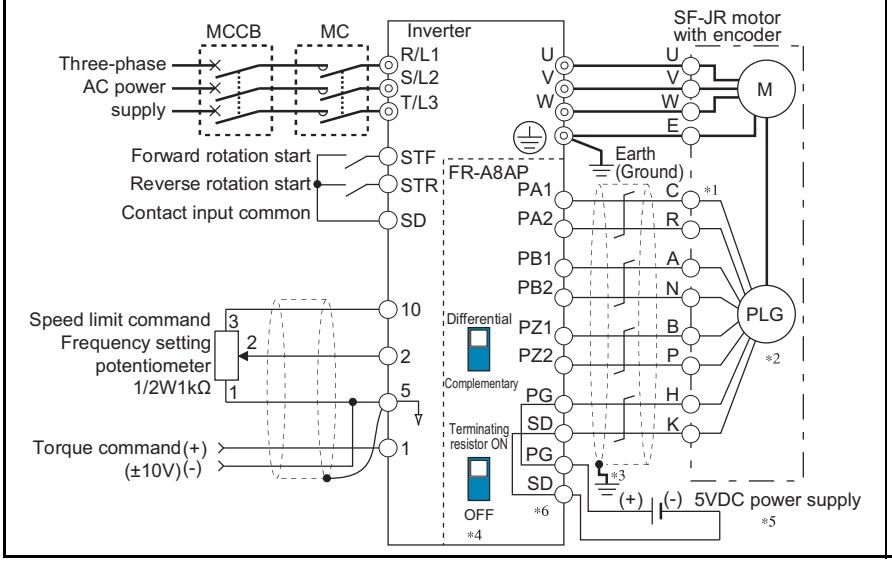	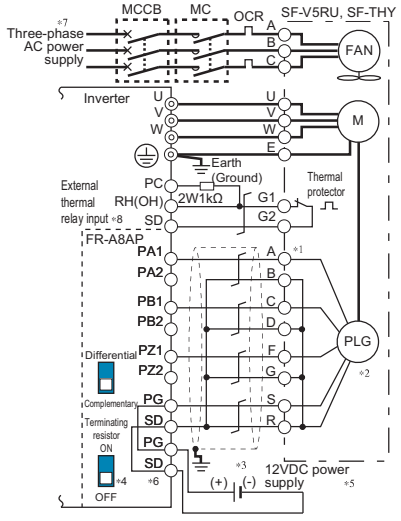

◆ Position control

Vector control dedicated motor (SF-V5RU, SF-THY) and 12 V complementary

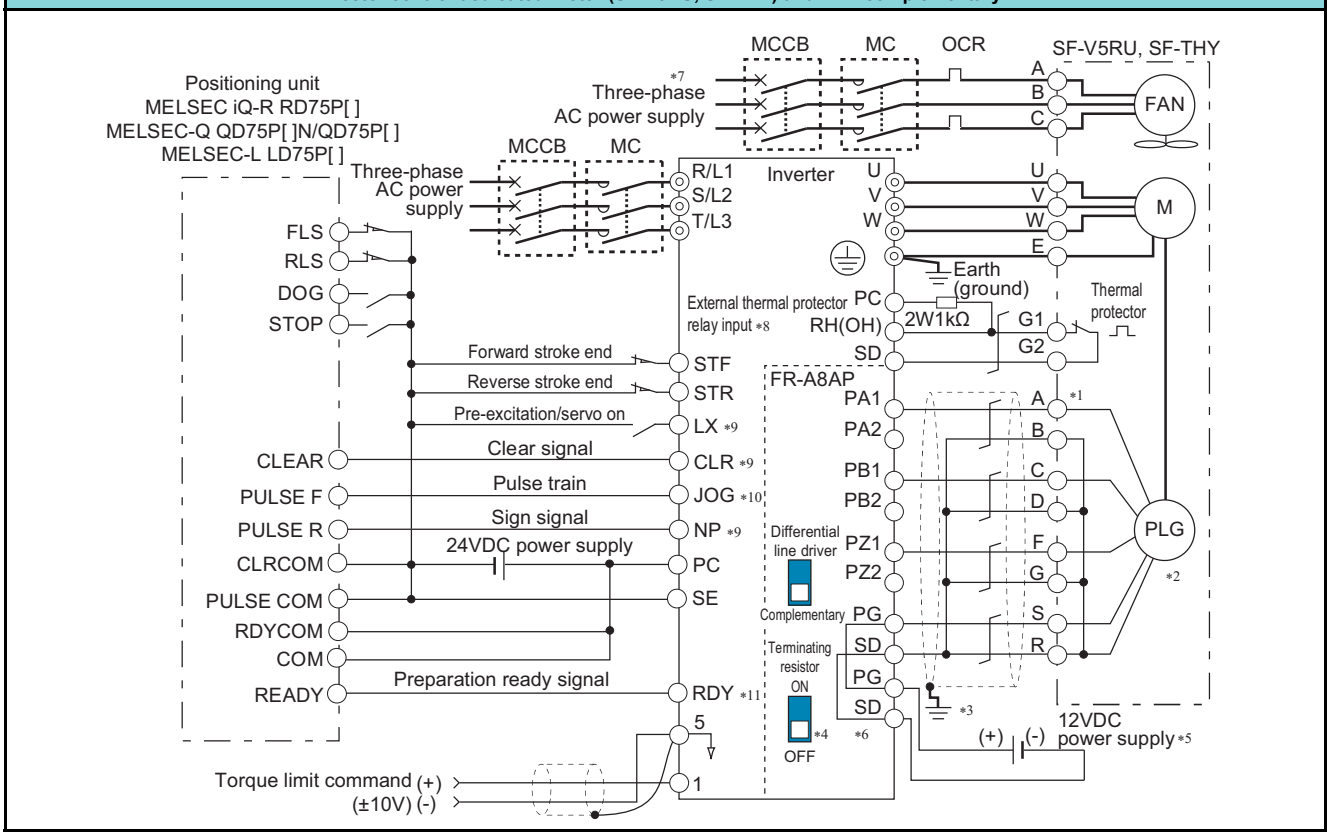

*1 The pin number differs according to the encoder used.
Speed, control, torque control, and position control by pulse train input are available with or without the Z-phase being connected.

*2 Connect the encoder so that there is no looseness between the motor and motor shaft. Speed ratio must be 1:1.

*3 Earth (ground) the shield of the encoder cable to the enclosure using a tool such as a P-clip. (Refer to the Instruction Manual (Detailed).)

*4 For the complementary, set the terminating resistor selection switch to OFF position. (Refer to the Instruction Manual (Detailed).)

*5 A separate power supply of 5 V/12 V/15 V/24 V is necessary according to the encoder power specification.
When the encoder output is the differential line driver type, only 5 V can be input.
Make the voltage of the external power supply the same as the encoder output voltage, and connect the external power supply across PG and SD.

*6 For terminal compatibility of the FR-JCBL, FR-V7CBL, and FR-A8AP, refer to the Instruction Manual (Detailed).

*7 For the fan of the 7.5 kW or lower dedicated motor, the power supply is single phase. (200 V/50 Hz, 200 to 230 V/60 Hz)

*8 Connect the recommended 2W1kΩ resistor between terminals PC and OH. (Recommended product: MOS2C102J 2W1kΩ by KOA Corporation)
Insert the input line and the resistor to a 2-wire blade terminal, and connect the blade terminal to terminal OH.
Insulate the lead wire of the resistor, for example by applying a contraction tube, and shape the wires so that the resistor and its lead wire will not touch other cables. Caulk the lead wire securely together with the thermal protector input line using a 2-wire blade terminal.
(Do not subject the lead wire's bottom area to an excessive pressure.)
To use a terminal as terminal OH, assign the OH (external thermal O/L relay input) signal to an input terminal. (Set "7" in any of **Pr.178** to **Pr.189**. For details, refer to the Instruction Manual (Detailed).)

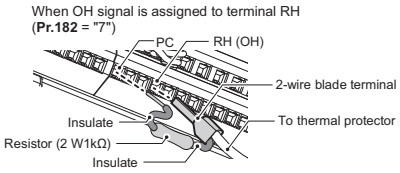

*9 Assign the function using **Pr.178 to Pr.184, Pr.187 to Pr.189 (input terminal function selection)**.

*10 When position control is selected, terminal JOG function is invalid and simple position pulse train input terminal becomes valid.

*11 Assign the function using **Pr.190 to Pr.194 (output terminal function selection)**.

Terminal Specification Explanation

Inverter

indicates that terminal functions can be selected from **Pr.178 to Pr.196 (I/O terminal function selection)**.
Terminal names and terminal functions are those of the factory set.

Type		Terminal Symbol	Common	Terminal Name	Description	
Main circuit		R/L1, S/L2, T/L3*1	—	AC power input	Connect to the commercial power supply.	
		U, V, W	—	Inverter output	Connect a three-phase squirrel-cage motor or PM motor.	
		R1/L11, S1/L21*2	—	Power supply for control circuit	Connected to the AC power supply terminals R/L1 and S/L2. To retain alarm display and alarm output, apply external power to this terminal.	
		P/+, PR *1*2	—	Brake resistor connection	Connect an optional brake resistor across terminals P/+ and PR. Remove the jumper across terminals PR and PX for the inverter capacity that has terminal PX. (FR-A820-00630(11K) or lower, FR-A840-00380(15K) or lower)	
		P3, PR *1*2	—	Brake resistor connection	Connect an optional brake resistor across terminals P3 and PR. (FR-A820-00770(15K) to 01250(22K), FR-A840-00470(18.5K) to 01800(55K))	
		P/+, N/-	—	Brake unit connection	Connect the brake unit (FR-BU2), high power factor converter (FR-HC2), multifunction regeneration converter (FR-XC), or DC power supply (under DC feeding mode).	
		P/+, P1*1	—	DC reactor connection	Remove the jumper across terminals P/+-P1 and connect a DC reactor. For the FR-A820-03800(75K) or higher, the FR-A840-02160(75K) or higher, and when a 75 kW or higher motor is used, always connect a DC reactor, which is available as an option. (The jumper is not installed for the FR-A820-03800(75K) or higher and the FR-A840-02160(75K) or higher.)	
		PR, PX *1*2	—	Built-in brake circuit connection	When the jumper is connected across terminals PX and PR (initial status), the built-in brake circuit is valid. The built-in brake circuit is equipped in the FR-A820-00490(7.5K) or lower and FR-A840-00250(7.5K) or lower.	
		⏚	—	Earth (Ground)	For earthing (grounding) the inverter chassis. Must be earthed (grounded).	
Control circuit/input signal	Contact input	STF	SD (sink (negative common)) PC (source (positive common))	Forward rotation start	Turn on the STF signal to start forward rotation and turn it off to stop.	When the STF and STR signals are turned on simultaneously, the stop command is given.
		STR		Reverse rotation start	Turn on the STR signal to start reverse rotation and turn it off to stop.	
		STP (STOP)		Start self-holding selection	Turn on the STOP signal to self-hold the start signal.	
		RH, RM, RL		Multi-speed selection	Multi-speed can be selected according to the combination of RH, RM and RL signals.	
		JOG		Jog mode selection	Turn on the JOG signal to select Jog operation (initial setting) and turn on the start signal (STF or STR) to start Jog operation.	
				Pulse train input	JOG terminal can be used as pulse train input terminal. To use as pulse train input terminal, the **Pr.291** setting needs to be changed. (maximum input pulse: 100k pulses/s)	
		RT		Second function selection	Turn on the RT signal to select second function selection. When the second function such as "Second torque boost" and "Second V/F (base frequency)" are set, turning on the RT signal selects these functions.	
		MRS		Output stop	Turn on the MRS signal (2 ms or more) to stop the inverter output. Use to shut off the inverter output when stopping the motor by electromagnetic brake.	
		MRS (X10)*7		Output stop (Inverter operation enable)	Connect to terminal RDA of the converter unit (FR-CC2). When the RDA signal is turned OFF, the inverter output is shut off. The X10 signal (NC contact) is assigned to terminal MRS in the initial setting. Use **Pr.599** to change the specification to NO contact.	
		RES		Reset	Used to reset alarm output provided when protective circuit is activated. Turn on the RES signal for more than 0.1s, then turn it off. Recover about 1s after reset is cancelled.	
		AU		Terminal 4 input selection	Terminal 4 is made valid only when the AU signal is turned on. (The operation with the frequency setting signal of 4 to 20 mA DC is available.) Turning the AU signal on makes terminal 2 invalid.	
		CS		Selection of automatic restart after instantaneous power failure	When the CS signal is left on, the inverter restarts automatically at power restoration. Note that restart setting is necessary for this operation. In the initial setting, a restart is disabled.	
	Frequency setting	10E	5	Frequency setting power supply	When connecting a frequency setting potentiometer at an initial status, connect it to terminal 10. Change the input specifications of terminal 2 using **Pr.73** when connecting it to terminal 10E.	10 VDC ±0.4 V, permissible load current 10 mA
		10	5			5 VDC ±0.5 V, permissible load current 10 mA
		2	5	Frequency setting (voltage)	Inputting 0 to 5 VDC (or 0 to 10 V, 0 to 20 mA) provides the maximum output frequency at 5 V (10 V, 20 mA) and makes input and output proportional. Use **Pr.73** to switch from among input 0 to 5 VDC (initial setting), 0 to 10 VDC, and 0 to 20 mA. Set the voltage/current input switch in the ON position to select current input (0 to 20 mA).	Voltage input: Input resistance 10 to 11 kΩ Maximum permissible voltage 20 VDC Current input: Input resistance 245 Ω ±5 Ω Maximum permissible current 30 mA
		4	5	Frequency setting (current)	Inputting 4 to 20 mADC (or 0 to 5 V, 0 to 10 V) provides the maximum output frequency at 20 mA and makes input and output proportional. This input signal is valid only when the AU signal is on (terminal 2 input is invalid). Use **Pr.267** to switch from among input 4 to 20 mA (initial setting), 0 to 5 VDC, and 0 to 10 VDC. Set the voltage/current input switch in the OFF position to select voltage input (0 to 5 V/0 to 10 V). Use **Pr.858** to switch terminal functions.	
		1	5	Frequency setting auxiliary	Inputting 0 to ±5 VDC or 0 to ±10 VDC adds this signal to terminal 2 or 4 frequency setting signal. Use **Pr.73** to switch between input 0 to ±5 VDC and 0 to ±10 VDC (initial setting) input.	Input resistance 10 to 11 kΩ Maximum permissible voltage ±20 VDC
	Thermistor	10 2	—	PTC thermistor input	For receiving PTC thermistor outputs. When PTC thermistor is valid (**Pr.561** ≠ "9999"), terminal 2 is not available for frequency setting.	Applicable PTC thermistor specification Overheat detection resistance: 500 Ω to 30 kΩ (Set by **Pr.561**)
	Power	+24	SD	24 V external power supply input	For connecting 24 V external power supply. Select a 24 V external power supply that can output a current of 1.4 A or more. If the 24 V external power supply is connected, power is supplied to the control circuit while the main power circuit is OFF.	Input voltage 23 to 25.5 VDC
Control circuit/output signal	Relay	A1, B1, C1	—	Relay output 1 (alarm output)	1 changeover contact output indicates that the inverter protective function has activated and the output stopped. Alarm: discontinuity across B and C (continuity across A and C), Normal: continuity across B and C (discontinuity across A and C)	Contact capacity 230 VAC 0.3 A (power factor =0.4) 30 VDC 0.3 A
		A2, B2, C2	—	Relay output 2	1 changeover contact output	

Type		Terminal Symbol	Common	Terminal Name	Description		
Control circuit/output signal	Open collector	RUN	SE	Inverter running	Switched low when the inverter output frequency is equal to or higher than the starting frequency (initial value 0.5 Hz). Switched high during stop or DC injection brake operation.	Alarm code (4 bit) output (Refer to the Instruction Manual (Detailed).)	Permissible load 24 VDC (maximum 27 VDC) 0.1 A (The voltage drop is 2.8 V at maximum while the signal is ON.) LOW is when the open collector output transistor is ON (conducted). HIGH is when the transistor is OFF (not conducted).
		SU	SE	Up to frequency	Switched low when the output frequency reaches within the range of ±10% (initial value) of the set frequency. Switched high during acceleration/ deceleration and at a stop.		
		OL	SE	Overload alarm	Switched low when stall prevention is activated by the stall prevention function. Switched high when stall prevention is cancelled.		
		IPF	SE	Instantaneous power failure	Switched low when an instantaneous power failure and under voltage protections are activated.		
				Open collector output*7	No function is assigned in the initial setting. The function can be assigned setting **Pr.192**.*7		
		FU	SE	Frequency detection	Switched low when the inverter output frequency is equal to or higher than the preset detected frequency and high when less than the preset detected frequency.		
	Pulse	FM*5	SD	For meter	Select one e.g. output frequency from monitor items. (The signal is not output during an inverter reset.) The output signal is proportional to the magnitude of the corresponding monitoring item. The output signal is proportional to the magnitude of the corresponding monitoring item. Use **Pr.55**, **Pr.56**, and **Pr.866** to set full scales for the monitored output frequency, output current, and torque.	Output item: output frequency (initial setting), permissible load current 2 mA, For full scale 1440 pulses/s	
				NPN open collector output		Signals can be output from the open collector terminals by setting **Pr.291**. (maximum output pulse: 50k pulses/s)	
	Analog	AM	5	Analog voltage output		Output item: output frequency (initial setting), output signal 0 to ±10 VDC, permissible load current 1 mA (load impedance 10 kΩ or more), resolution 13 bit	
		CA*6	5	Analog current output		Output item: output frequency (initial setting), Load impedance 200 Ω to 450 Ω Output signal 0 to 20 mADC	
Safety stop signal		S1	SIC	Safety stop input (Channel 1)	Terminals S1 and S2 are used for the safety stop input signal for the safety relay module. Terminals S1 and S2 are used at the same time (dual channel). Inverter output is shutoff by shortening/opening between terminals S1 and SIC, or between S2 and SIC. In the initial status, terminals S1 and S2 are shorted with terminal PC by shorting wires. Terminal SIC is shorted with terminal SD. Remove the shorting wires and connect the safety relay module when using the safety stop function.		Input resistance 4.7 kΩ Input current 4 to 6 mADC (with 24 VDC input)
		S2	SIC	Safety stop input (Channel 2)			
		So (SO)	SOC	Safety monitor output (open collector output)	Indicates the safety stop input signal status. Switched to LOW when the status is other than the internal safety circuit failure. Switched to HIGH during the internal safety circuit failure status. (LOW is when the open collector output transistor is ON (conducted). HIGH is when the transistor is OFF (not conducted).) Refer to the Safety Stop Function Instruction Manual when the signal is switched to HIGH while both terminals S1 and S2 are open.		Permissible load 24 VDC (maximum 27 VDC) 0.1 A (The voltage drop is 3.4 V at maximum while the signal is ON.)
Common terminal		SD	—	Contact input common (sink)*3	Common terminal for the contact input terminal (sink logic) and terminal FM.		
			—	External transistor common (source)*4	Connect this terminal to the power supply common terminal of a transistor output (open collector output) device, such as a programmable controller, in the source logic to avoid malfunction by undesirable current.		
			—	24 VDC power supply common	Common output terminal for 24 VDC 0.1 A power supply (terminal PC). Isolated from terminals 5 and SE.		
		PC	—	External transistor common (sink)*3	Connect this terminal to the power supply common terminal of a transistor output (open collector output) device, such as a programmable controller, in the sink logic to avoid malfunction by undesirable currents.		
			—	Contact input common (source)*4	Common terminal for contact input terminal (source logic).		
			SD	24 VDC power supply	Can be used as 24 VDC 0.1 A power supply.		
		5	—	Frequency setting common	Common terminal for frequency setting signal (terminal 2, 1 or 4) and analog output terminal AM, CA. Do not earth (ground).		
		SE	—	Open collector output common	Common terminal for terminals RUN, SU, OL, IPF, FU		
		SIC	—	Safety stop input terminal common	Common terminal for terminals S1 and S2.		
		SOC	—	Safety monitor output terminal common	Common terminal for terminal So (SO).		
Communication		—	—	PU connector	With the PU connector, communication can be made through RS-485. (1:1 connection only) • Conforming standard: EIA-485(RS-485) • Communication speed: 4800 to 115200 bps • Transmission format: Multi-drop link • Wiring length: 500 m		
	RS-485 terminals: TXD+, TXD-		—	Inverter transmission terminal	With the RS-485 terminals, communication can be made through RS-485. (The FR-A800-E inverter does not have the interface.) • Conforming standard: EIA-485(RS-485) • Communication speed: 300 to 115200 bps • Transmission format: Multi-drop link • Overall extension: 500 m RS-485 terminals for RS-485 communication to enable parallel operation. (FR-A842-P) • Total wiring length: 5 m or less		
	RS-485 terminals: RXD+, RXD-		—	Inverter reception terminal			
	RS-485 terminals: GND (SG)		—	Earth (Ground)			
	—		—	USB A connector	• A connector (receptacle). • A USB memory device enables parameter copies and the trace function.		• Interface: Conforms to USB1.1 (USB2.0 full-speed compatible). • Transmission speed: 12 Mbps
	—		—	USB B connector	• Mini B connector (receptacle). • Connected to a personal computer via USB to enable setting, monitoring, test operations of the inverter by FR Configurator2.		
	CC-Link IE	CON1	—	Connector for communication (Port 1)	Communication can be made via the CC-Link IE TSN or CC-Link IE Field Network. (The FR-A800-GN or FR-A800-GF has the interface. For the FR-A800-F, install the safety communication option (FR-A8NCG-S) to use the communication connectors (port 1 and port 2). For the other inverters, the communication option (FR-A8NCG or FR-A8NCE) is available to use the communication connectors (port 1 and port 2).)		
	CC-Link IE	CON2	—	Connector for communication (Port 2)			
	—		—	Ethernet connector	Using Ethernet communication, the inverter's status can be monitored or the parameters can be set via Internet. (Only the FR-A800-E inverter has the interface.)		

*1 Terminals R/L1, S/L2, T/L3, PR, P3, P1, and PX are not provided in the separated converter type.
*2 Terminals R1/L11, S1/L21, PR, P3, and PX are not provided for the IP55 compatible model.
*3 The sink logic is initially set for the FM-type inverter.
*4 The source logic is initially set for the CA-type inverter.
*5 Terminal FM is provided in the FM-type inverter.
*6 Terminal CA is provided in the CA-type inverter.
*7 Name and function of the separated converter type.

Converter unit (FR-CC2)

indicates that terminal functions can be selected from **Pr.178, Pr.187, Pr.189 to Pr.195 (I/O terminal function selection)**.
Terminal names and terminal functions are those of the factory set.

Type		Terminal Symbol	Common	Terminal Name	Description	
Main circuit		R/L1, S/L2, T/L3 (R2/L12, S2/L22, T2/L32)	—	AC power input	Connect these terminals to the commercial power supply. For 12-phase applications, use these terminals for connection with a 12-phase rectifier power transformer (3-winding transformer). For details, refer to the Instruction Manual of the converter unit.	
Main circuit		R1/L11,S1/L21	—	Power supply for the control circuit	Connected to the AC power supply terminals R/L1 and S/L2. To retain the fault display and fault output, remove the jumpers across terminals R/L1 and R1/L11 and across S/L2 and S1/L21 and supply external power to these terminals.	
Main circuit		P/+, N/-	—	Inverter connection	Connect to terminals P/+ and N/- of the inverter. (Wire one terminal P/+ to another terminal P/+, and do likewise for terminal N/-.)	
Main circuit		⏚	—	Earth (ground)	For earthing (grounding) the converter unit chassis. This must be earthed (grounded).	
Control circuit/input signal	Contact input	RES	SD (sink (negative common)) PC (source (positive common))	Reset	Use this signal to reset a fault output provided when a protective function is activated. Turn ON the RES signal for 0.1 s or longer, then turn it OFF. In the initial setting, reset is always enabled. By setting **Pr.75**, reset can be set enabled only at fault occurrence of the converter unit. The converter unit recovers about 1 s after the reset is released.	
Control circuit/input signal	Contact input	OH		External thermal relay input	The external thermal relay input (OH) signal is used when using an external thermal relay or a thermal protector built into the motor to protect the motor from overheating. When the thermal relay is activated, the inverter trips by the external thermal relay operation (E.OHT).	
Control circuit/input signal	Contact input	RDI		Contact input	The function can be assigned by setting **Pr.178**.	
Control circuit/input signal	Power supply input	+24	PC	24 V external power supply input	For connecting a 24 V external power supply. If a 24 V external power supply is connected, power is supplied to the control circuit while the main power circuit is OFF.	
Control circuit/output signal	Relay	A1, B1, C1	—	Relay output 1 (fault output)	1 changeover contact output that indicates that the protective function of the converter unit has been activated and the outputs are stopped. Fault: discontinuity across B and C (continuity across A and C), Normal: continuity across Band C (discontinuity across A and C)	Contact capacity 230 VAC 0.3 A (power factor = 0.4) 30 VDC 0.3 A
Control circuit/output signal	Relay	88R, 88S	—	For manufacturer setting. Do not use.		
Control circuit/output signal	Open collector	RDA	SE	Inverter operation enable (NO contact)	Switched to LOW when the converter unit operation is ready. Assign the signal to terminal MRS (X10) of the inverter. The inverter can be started when the RDA status is LOW.	Permissible load 24 VDC (maximum 27 VDC) 0.1 A (The voltage drop is 2.8 V at maximum while the signal is ON.) LOW is when the open collector output transistor is ON (conducted). HIGH is when the transistor is OFF (not conducted).
Control circuit/output signal	Open collector	RDB	SE	Inverter operation enable (NC contact)	Switched to LOW when a converter unit fault occurs or the converter is reset. The inverter can be started when the RDB status is HIGH.	
Control circuit/output signal	Open collector	RSO	SE	Inverter reset	Switched to LOW when the converter is reset (RES-ON). Assign the signal to terminal RES of the inverter. The inverter is reset when it is connected with the RSO status LOW.	
Control circuit/output signal	Open collector	IPF	SE	Instantaneous power failure	Switched to LOW when an instantaneous power failure is detected.	
Control circuit/output signal	Open collector	FAN	SE	Cooling fan fault	Switched to LOW when a cooling fan fault occurs.	
Common terminal		SD	—	Contact input common (sink) (Initial setting)	Common terminal for contact input terminal (sink logic).	
Common terminal		SD	—	External transistor common (source)	Connect this terminal to the power supply common terminal of a transistor output (open collector output) device, such as a programmable controller, in the source logic to avoid malfunction by undesirable current.	
Common terminal		SD	—	24 VDC power supply common	Common terminal for the 24 VDC power supply (terminal PC, terminal +24) Isolated from terminal SE.	
Common terminal		PC	—	External transistor common (sink) (Initial setting)	Connect this terminal to the power supply common terminal of a transistor output (open collector output) device, such as a programmable controller, in the sink logic to avoid malfunction by undesirable current.	
Common terminal		PC	—	Contact input common (source)	Common terminal for contact input terminal (source logic).	
Common terminal		PC	SD	24 VDC power supply common	Can be used as a 24 VDC 0.1 A power supply.	
Common terminal		SE	—	Open collector output common	Common terminal for terminals RDA, RDB, RSO, IPF, FAN	
Communication		—	—	PU connector	With the PU connector, communication can be made through RS-485. (For connection on a 1:1 basis only) • Conforming standard: EIA-485 (RS-485) • Transmission format: Multidrop link • Communication speed: 4800 to 115200 bps • Wiring length: 500 m	
Communication		RS-485 terminals TXD+	—	Converter unit transmission terminal	The RS-485 terminals enable the communication by RS-485. • Conforming standard: EIA-485 (RS-485) • Transmission format: Multidrop link • Communication speed: 300 to 115200 bps • Overall length: 500 m RS-485 terminals for RS-485 communication to enable parallel operation. (FR-CC2-P) • Total wiring length : 5 m or less	
Communication		RS-485 terminals TXD-	—			
Communication		RS-485 terminals RXD+	—	Converter unit reception terminal		
Communication		RS-485 terminals RXD-	—			
Communication		RS-485 terminals GND (SG)	—	Earthing (grounding)		

Operation Panel (FR-DU08(-01))

Components of the operation panel

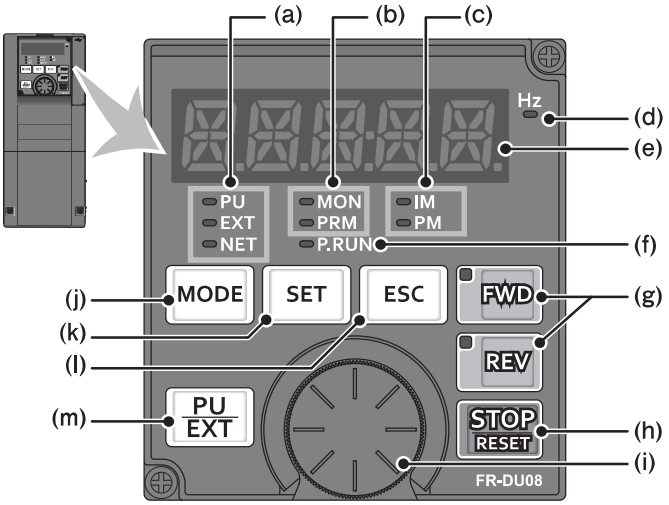

The operation panel of the inverter can be used for the converter unit.

No.	Component *1		Name	Description
(a)	FR-DU08	FR-DU08-01	Operation mode indicator *2	PU/HAND: ON when the inverter is in the PU operation mode. EXT/AUTO: ON when the inverter is in the External operation mode. (ON when the inverter in the initial setting is powered ON.) NET: ON when the inverter is in the Network operation mode. PU and EXT: ON when the inverter is in the External/PU combined operation mode 1 or 2.
	PU EXT NET	HAND AUTO NET		
(b)	MON PRM		Operation panel status indicator	MON: ON when the operation panel is in the monitoring mode. Quickly blinks twice intermittently while the protective function is activated. PRM: ON when the operation panel is in the parameter setting mode.
(c)	IM PM		Control motor indicator *2	IM: ON when the inverter is set to control the induction motor. PM: ON to indicate the PM motor control. The indicator blinks during test operation.
(d)	Hz		Frequency unit indicator *2	ON when the actual frequency is monitored. (Blinks when the set frequency is monitored.)
(e)			Monitor (5-digit LED)	Shows a numeric value (readout) of a monitor item such as the frequency or a parameter number.(The monitor item can be changed according to the settings of **Pr.52**, **Pr.774** to **Pr.776**.)
(f)	P.RUN		PLC function indicator *2	ON when the PLC function of the inverter is valid.
(g)	FWD REV		FWD key, REV key *2	FWD key: Starts forward rotation operation. Its LED is ON during forward operation. REV key: Starts reverse rotation operation. Its LED is ON during reverse operation. Either LED blinks under the following conditions. • When the frequency command is not given even if the forward/reverse command is given. • When the frequency command is equal to or lower than the starting frequency. • When the MRS signal is being input.
(h)	STOP RESET		STOP/RESET key	Stops the operation commands. Used to reset the inverter / converter unit when the protection function is activated.
(i)			Setting dial	The setting dial of the Mitsubishi Electric inverters. Turn the setting dial to change the setting of frequency or parameter, etc. Press the setting dial to perform the following operations: • To display a set frequency in the monitoring mode (The monitor item shown on the display can be changed by using **Pr.992**.) • To display the present setting during calibration • To display a fault history number in the fault history mode
(j)	MODE		MODE key	Switches the operation panel to a different mode. The easy setting of the inverter operation mode is enabled by pressing this key simultaneously with PU EXT. Every key on the operation panel becomes inoperable by holding this key for 2 seconds. The key lock function is disabled when **Pr.161**="0 (initial setting)".
(k)	SET		SET key	Confirms each selection. When this key is pressed during inverter operation, the monitor item changes. Initial setting in the monitor mode: Output frequency → Output current → Output voltage (The monitor item can be changed according to the settings of **Pr.52**, **Pr.774** to **Pr.776**.)
(l)	ESC		ESC key	Goes back to the previous display. Holding this key for a longer time changes the display back to the monitor mode.
(m)	FR-DU08	FR-DU08-01	PU/EXT key *2	Switches between the PU operation mode, the PUJOG operation mode, and the External operation mode. Switches to the easy setting mode by pressing simultaneously with MODE. Also cancels the PU stop warning.
	PU EXT	HAND AUTO		

*1 The FR-DU08-01 is an operation panel for IP55 compatible models.
*2 Not available for the converter unit.

Basic operation(FR-DU08)

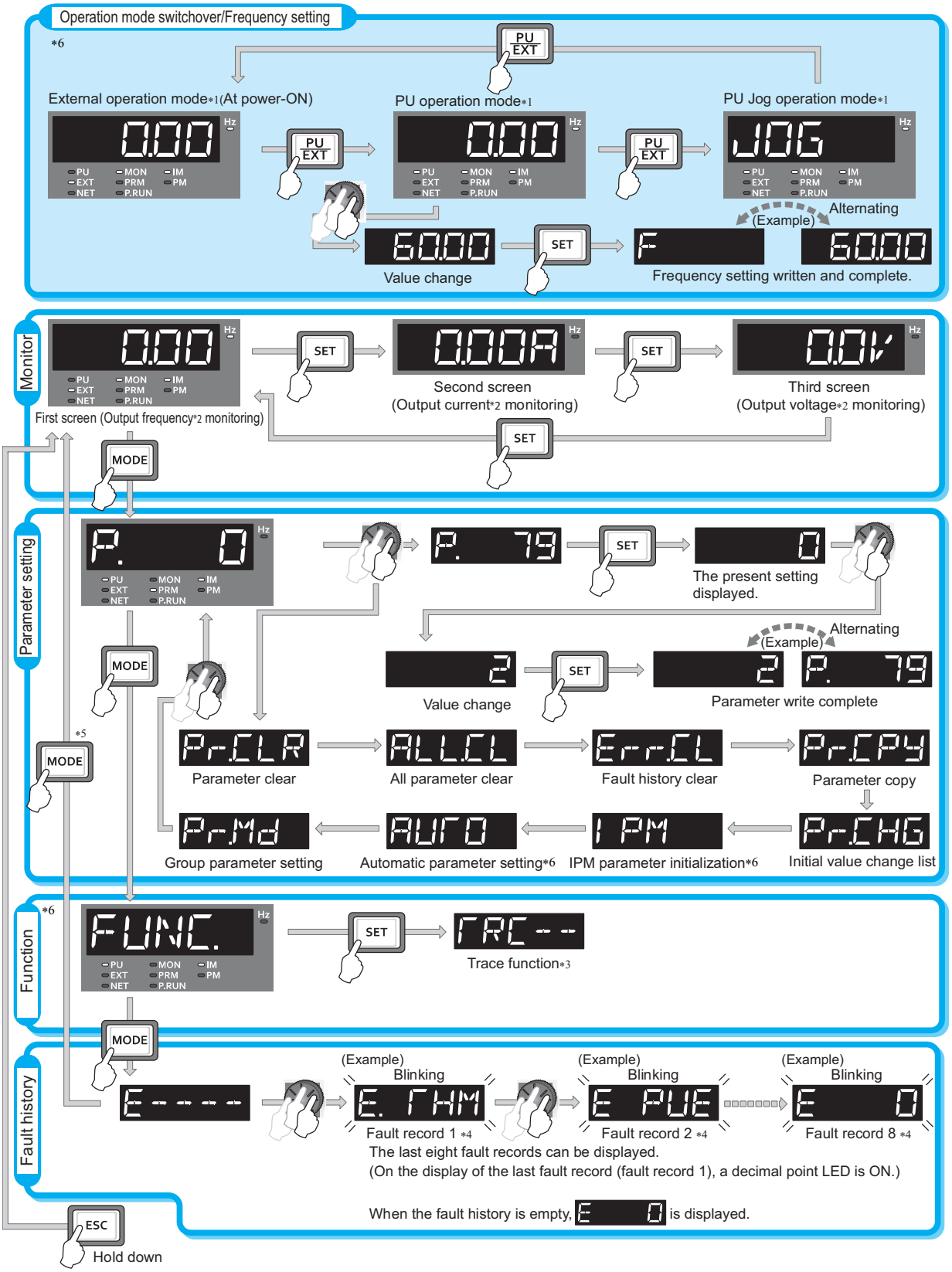

*1 For the details of operation modes, refer to the Instruction Manual (Detailed).
*2 The monitor items can be changed. (Refer to the Instruction Manual (Detailed).)
*3 For the details of the trace function, refer to the Instruction Manual (Detailed).
*4 While a fault is displayed, the display shifts as follows by pressing SET: Output frequency at the fault → Output current → Output voltage → Energization time → Year → Month → Date → Time. (After Time, it goes back to a fault display.) Pressing the setting dial shows the fault history number.
*5 The USB memory mode will appear if a USB memory device is connected. (Refer to **page 90**.)
*6 Not available for the converter unit.

Parameter copy to the USB memory device

Insert the USB memory in the inverter. The USB memory mode is displayed and USB memory operations are possible.

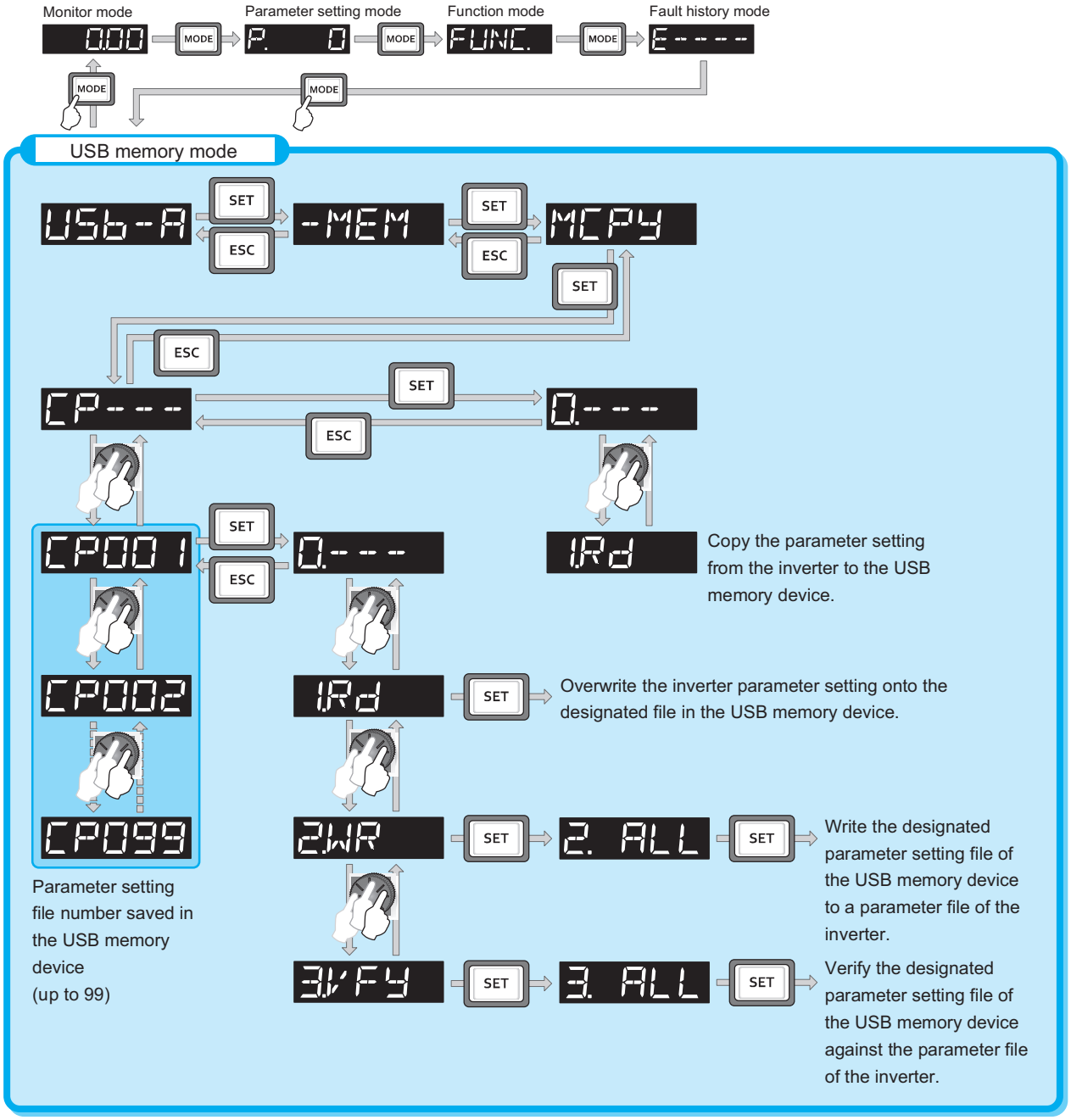

Group parameter display

Parameter numbers can be changed to grouped parameter numbers.
Parameters are grouped by their functions. The related parameters can be set easily.

(1) Changing to the grouped parameter numbers

Pr.MD setting value	Description
0	No change
1	Parameter display by parameter number
2	Parameter display by function group

Operation

1. Turning ON the power of the inverter
The operation panel is in the monitor mode.

2. Selecting the parameter setting mode
Press [MODE] to choose the parameter setting mode. (The parameter number read previously appears.)

3. Selecting the parameter
Turn ⊛ until "Pr.Md" (parameter display method) appears.
Press [SET]. "0" (initial value) will appear.

4. Selecting the use of the function group number
Turn ⊛ to change the set value to "2" (group parameter display). Press [SET] to select the group parameter setting. "2" and "Pr.Md" are displayed alternately after the setting is completed.

(2) Changing parameter settings in the group parameter display

Changing example	Change the **P.H400(Pr.1) Maximum frequency**.

Operation

1. Turning ON the power of the inverter
The operation panel is in the monitor mode.

2. Changing the operation mode
Press [PU EXT] to choose the PU operation mode. [PU] indicator is lit.

3. Selecting the parameter setting mode
Press [MODE] to choose the parameter setting mode. (The parameter number read previously appears.)

4. Enabling the function group selection
Press [ESC] several times until "PA0 . ." appears.
(No need to press [ESC] if the previously read parameter is one of "Pr.CLR" to "Pr.Md". Skip this operation and proceed to step 5.)

5. Enabling the function group selection
Turn ⊛ until "PH4 . ." (protective function parameter 4) appears. Press [SET] to display "PH4 - - " and make the group parameters of the protective function parameter 4 selectable.

6. Selecting the parameter
Turn ⊛ until "PH400" (**P.H400 Maximum frequency**) appears. Press [SET] to read the present set value. " 120.00" (initial value) appears.

7. Changing the setting value
Turn ⊛ to change the set value to "60.00". Press [SET] to enter the setting. "60.00" and "PH400" are displayed alternately after the setting is completed.

LCD operation panel (FR-LU08(-01))

- The FR-LU08 is an optional operation panel adopting an LCD panel capable of displaying text and menus.
- Replacement with the operation panel (FR-DU08) and installation on the enclosure surface using a connection cable (FR-CB2) are possible. (To connect the FR-LU08, an optional operation panel connection connector (FR-ADP) is required.)
- Parameter settings for up to three inverters can be saved.
- When the FR-LU08 is connected to the inverter, the internal clock of the inverter can be synchronized with the clock of FRLU08. (Real time clock function)
  With a battery (CR1216), the FR-LU08 time count continues even if the main power of the inverter is turned OFF. (The time count of the inverter internal clock does not continue when the inverter power is turned OFF.)
- The FR-LU08-01 meets the IP55 rating (except for the PU connector). It can be directly installed to the IP55 compatible model.

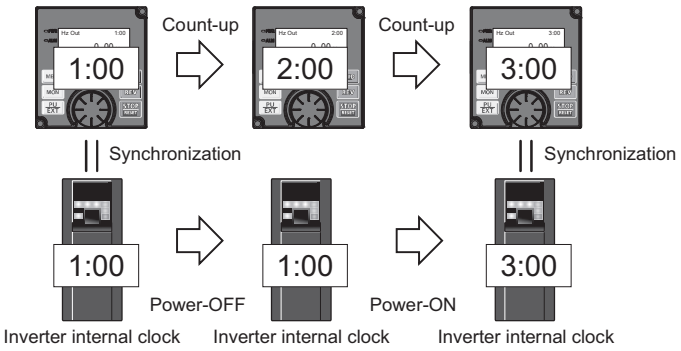

Appearance and parts name

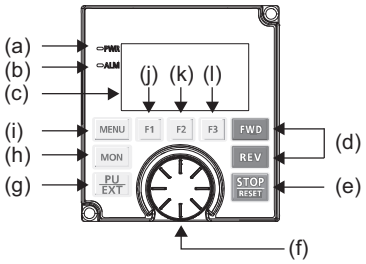

Symbol	Name	Description
a	Power lamp	ON when the power is turned ON.
b	Alarm lamp	ON when an inverter alarm occurs.
c	Monitor	Shows the frequency, parameter number, etc. (Using **Pr.52, Pr.774 to Pr.776**, the monitored item can be changed.)
d	FWD key, REV key	FWD key: Starts the forward operation. REV key: Starts the reverse operation.
e	STOP/RESET key	Used to stop operation commands. Used to reset the inverter when the protective function is activated.
f	Setting dial	The setting dial is used to change the frequency and parameter settings. Pressing the dial shows details of the fault history mode.
g	PU/EXT key *1	Switches between the PU mode, the PUJOG mode, and the External operation mode.
h	MON key	Shows the first monitored item.
i	MENU key	Displays the quick menu. Pressing the key while the quick menu is displayed displays the function menu.
j	Software key (F1)	Select a guidance displayed on the monitor.
k	Software key (F2)	
l	Software key (F3)	

*1 HAND/AUTO key for the FR-LU08-01.

Switching the main monitor data

When **Pr.52 Operation panel main monitor selection** is set to "0", by pressing F1 (PREV) or F3 (NEXT) 6 types of monitor data are displayed in order.

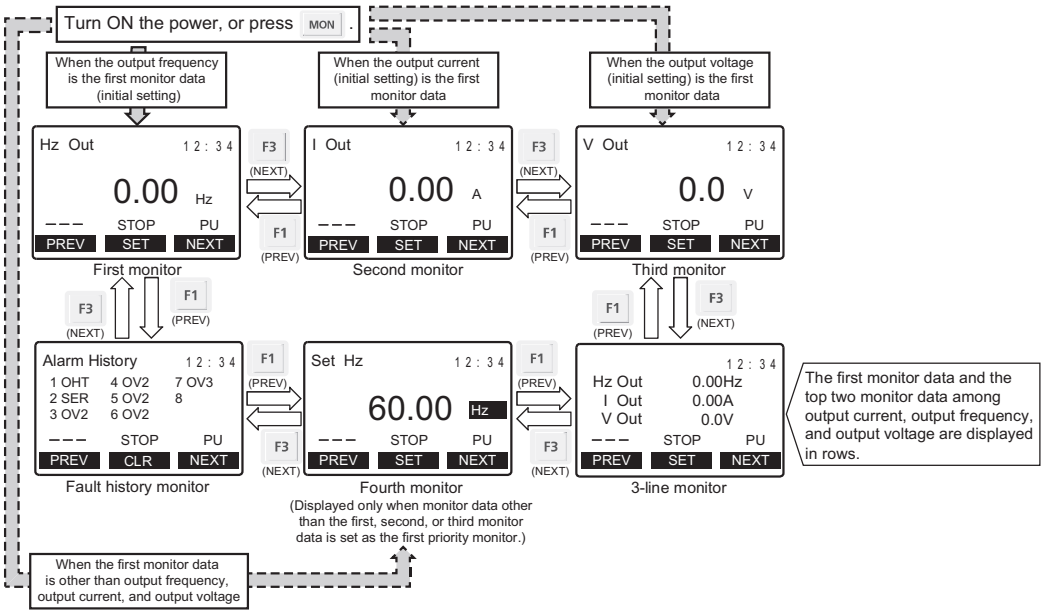

Inverter parameter list (by parameter number)

For simple variable-speed operation of the inverter, the initial value of the parameters may be used as they are. Set the necessary parameters to meet the load and operational specifications. Parameter setting, change and check can be made from the operation panel (FR-DU08).

NOTE

- Simple indicates simple mode parameters. Use **Pr.160 User group read selection** to indicate the simple mode parameters only. (Initial setting is to indicate the extended mode parameters.)
- Parameter setting may be restricted in some operating statuses. Use **Pr.77 Parameter write selection** to change the setting.

Function	Pr.	Pr. group	Name	Setting range	Minimum setting increments	Initial value FM	Initial value CA	Customer setting
Basic functions	0	G000	Torque boost Simple	0 to 30%	0.1%	6% *1 4% *1 3% *1 2% *1 1% *1		
	1	H400	Maximum frequency Simple	0 to 120 Hz	0.01 Hz	120 Hz *2 60 Hz *3		
	2	H401	Minimum frequency Simple	0 to 120 Hz	0.01 Hz	0 Hz		
	3	G001	Base frequency Simple	0 to 590 Hz	0.01 Hz	60 Hz	50 Hz	
	4	D301	Multi-speed setting (high speed) Simple	0 to 590 Hz	0.01 Hz	60 Hz	50 Hz	
	5	D302	Multi-speed setting (middle speed) Simple	0 to 590 Hz	0.01 Hz	30 Hz		
	6	D303	Multi-speed setting (low speed) Simple	0 to 590 Hz	0.01 Hz	10 Hz		
	7	F010	Acceleration time Simple	0 to 3600 s	0.1 s	5 s *4 15 s *5		
	8	F011	Deceleration time Simple	0 to 3600 s	0.1 s	5 s *4 15 s *5		
	9	H000 C103	Electronic thermal O/L relay Simple Rated motor current Simple	0 to 500 A 0 to 3600 A	0.01 A *2 0.1 A *3	Inverter rated current		
DC injection brake	10	G100	DC injection brake operation frequency	0 to 120 Hz, 9999	0.01 Hz	3 Hz		
	11	G101	DC injection brake operation time	0 to 10 s, 8888	0.1 s	0.5 s		
	12	G110	DC injection brake operation voltage	0 to 30%	0.1%	4% *6 2% *6 1% *6		
—	13	F102	Starting frequency	0 to 60 Hz	0.01 Hz	0.5 Hz		
—	14	G003	Load pattern selection	0 to 5, 12 to 15	1	0		
Jog operation	15	D200	Jog frequency	0 to 590 Hz	0.01 Hz	5 Hz		
	16	F002	Jog acceleration/deceleration time	0 to 3600 s	0.1 s	0.5 s		
—	17	T720	MRS input selection	0, 2, 4	1	0		
—	18	H402	High speed maximum frequency	0 to 590 Hz	0.01 Hz	120 Hz *2 60 Hz *3		
—	19	G002	Base frequency voltage	0 to 1000 V, 8888, 9999	0.1 V	9999	8888	
Acceleration/deceleration times	20	F000	Acceleration/deceleration reference frequency	1 to 590 Hz	0.01 Hz	60 Hz	50 Hz	
	21	F001	Acceleration/deceleration time increments	0, 1	1	0		
Stall prevention	22	H500	Stall prevention operation level (Torque limit level)	0 to 400%	0.1%	150%		
	23	H610	Stall prevention operation level compensation factor at double speed	0 to 200%, 9999	0.1%	9999		

Function	Pr.	Pr. group	Name	Setting range	Minimum setting increments	Initial value FM	Initial value CA	Customer setting
Multi-speed setting	24 to 27	D304 to D307	Multi-speed setting (4 speed to 7 speed)	0 to 590 Hz, 9999	0.01 Hz	9999		
—	28	D300	Multi-speed input compensation selection	0, 1	1	0		
—	29	F100	Acceleration/deceleration pattern selection	0 to 6	1	0		
—	30	E300	Regenerative function selection	0 to 2, 10, 11, 20, 21, 100 to 102, 110, 111, 120, 121 *11*14	1	0		
				2, 10, 11, 102, 110, 111 *12*15	1	10		
				0, 2, 10, 20, 100, 102, 110, 120 *13	1	0		
Frequency jump	31	H420	Frequency jump 1A	0 to 590 Hz, 9999	0.01 Hz	9999		
	32	H421	Frequency jump 1B	0 to 590 Hz, 9999	0.01 Hz	9999		
	33	H422	Frequency jump 2A	0 to 590 Hz, 9999	0.01 Hz	9999		
	34	H423	Frequency jump 2B	0 to 590 Hz, 9999	0.01 Hz	9999		
	35	H424	Frequency jump 3A	0 to 590 Hz, 9999	0.01 Hz	9999		
	36	H425	Frequency jump 3B	0 to 590 Hz, 9999	0.01 Hz	9999		
—	37	M000	Speed display	0, 1 to 9998	1	0		
Frequency detection	41	M441	Up-to-frequency sensitivity	0 to 100%	0.1%	10%		
	42	M442	Output frequency detection	0 to 590 Hz	0.01 Hz	6 Hz		
	43	M443	Output frequency detection for reverse rotation	0 to 590 Hz, 9999	0.01 Hz	9999		
Second functions	44	F020	Second acceleration/deceleration time	0 to 3600 s	0.1 s	5 s		
	45	F021	Second deceleration time	0 to 3600 s, 9999	0.1 s	9999		
	46	G010	Second torque boost	0 to 30%, 9999	0.1%	9999		
	47	G011	Second V/F (base frequency)	0 to 590 Hz, 9999	0.01 Hz	9999		
	48	H600	Second stall prevention operation level	0 to 400%	0.1%	150%		
	49	H601	Second stall prevention operation frequency	0 to 590 Hz, 9999	0.01 Hz	0 Hz		
	50	M444	Second output frequency detection	0 to 590 Hz	0.01 Hz	30 Hz		
	51	H010 C203	Second electronic thermal O/L relay Rated second motor current	0 to 500 A, 9999 *2	0.01 A	9999		
				0 to 3600 A, 9999 *3	0.1 A			
Monitor functions	52	M100	Operation panel main monitor selection	0, 5 to 14, 17 to 20, 22 to 46, 50 to 57, 61, 62, 64, 67, 68, 71 to 75, 87 to 98, 100	1	0		
	54	M300	FM/CA terminal function selection	1 to 3, 5 to 14, 17, 18, 21, 24, 32 to 34, 36, 37, 46, 50, 52, 53, 61, 62, 67, 70, 87 to 90, 92, 93, 95, 97, 98	1	1		
	55	M040	Frequency monitoring reference	0 to 590 Hz	0.01 Hz	60 Hz	50 Hz	
	56	M041	Current monitoring reference	0 to 500 A *2	0.01 A	Inverter rated current		
				0 to 3600 A *3	0.1 A			
Automatic restart	57	A702	Restart coasting time	0, 0.1 to 30 s, 9999	0.1 s	9999		
	58	A703	Restart cushion time	0 to 60 s	0.1 s	1 s		
—	59	F101	Remote function selection	0 to 3, 11 to 13	1	0		
—	60	G030	Energy saving control selection	0, 4, 9	1	0		

Function	Pr.	Pr. group	Name	Setting range	Minimum setting increments	Initial value FM	Initial value CA	Customer setting
Automatic acceleration/ deceleration	61	F510	Reference current	0 to 500 A, 9999 *2	0.01 A *2	9999		
				0 to 3600 A, 9999 *3	0.1 A *3			
	62	F511	Reference value at acceleration	0 to 400%, 9999	0.1%	9999		
	63	F512	Reference value at deceleration	0 to 400%, 9999	0.1%	9999		
	64	F520	Starting frequency for elevator mode	0 to 10 Hz, 9999	0.01 Hz	9999		
—	65 *21	H300	Retry selection	0 to 5	1	0		
—	66	H611	Stall prevention operation reduction starting frequency	0 to 590 Hz	0.01 Hz	60 Hz	50 Hz	
Retry	67 *21	H301	Number of retries at fault occurrence	0 to 10, 101 to 110	1	0		
	68 *21	H302	Retry waiting time	0.1 to 600 s	0.1 s	1 s		
	69 *21	H303	Retry count display erase	0	1	0		
—	70 *16	G107	Special regenerative brake duty	0 to 100%	0.1%	0%		
—	71	C100	Applied motor	0 to 6, 13 to 16, 20, 23, 24, 30, 33, 34, 40, 43, 44, 50, 53, 54, 70, 73, 74, 330, 333, 334, 1140, 8090, 8093, 8094, 9090, 9093, 9094	1	0		
—	72 *21	E600	PWM frequency selection	0 to 15 *2	1	2		
				0 to 6, 25 *3				
—	73	T000	Analog input selection	0 to 7, 10 to 17	1	1		
—	74	T002	Input filter time constant	0 to 8	1	1		
—	75	-	Reset selection/disconnected PU detection/PU stop selection	0 to 3, 14 to 17, 1000 to 1003, 1014 to 1017 *2	1	14		
				0 to 3, 14 to 17, 100 to 103, 114 to 117, 1000 to 1003, 1014 to 1017, 1100 to 1103,1114 to 1117 *3				
		E100	Reset selection	0 to 3		0		
		E101	Disconnected PU detection	0, 1				
		E102	PU stop selection			1		
		E107	Reset limit	0 *2	1	0		
				0, 1 *3				
—	76	M510	Fault code output selection	0 to 2	1	0		
—	77	E400	Parameter write selection	0 to 2	1	0		
—	78	D020	Reverse rotation prevention selection	0 to 2	1	0		
—	79	D000	Operation mode selection Simple	0 to 4, 6, 7	1	0		

Function	Pr.	Pr. group	Name	Setting range	Minimum setting increments	Initial value FM	Initial value CA	Customer setting
Motor constants	80	C101	Motor capacity	0.4 to 55 kW, 9999 *2	0.01 kW *2	9999		
				0 to 3600 kW, 9999 *3	0.1 kW *3			
	81	C102	Number of motor poles	2, 4, 6, 8, 10, 12, 9999	1	9999		
	82	C125	Motor excitation current	0 to 500 A, 9999 *2	0.01 A *2	9999		
				0 to 3600 A, 9999 *3	0.1 A *3			
	83	C104	Rated motor voltage	0 to 1000 V	0.1 V	200 V *7		
						400 V *8		
	84	C105	Rated motor frequency	10 to 400 Hz, 9999	0.01 Hz	9999		
	85	G201	Excitation current break point	0 to 400 Hz, 9999	0.01 Hz	9999		
	86	G202	Excitation current low-speed scaling factor	0 to 300%, 9999	0.1%	9999		
	89	G932	Speed control gain (Advanced magnetic flux vector)	0 to 200%, 9999	0.1%	9999		
	90	C120	Motor constant (R1)	0 to 50 Ω, 9999 *2	0.001 Ω *2	9999		
				0 to 400 mΩ, 9999 *3	0.01 mΩ *3			
	91	C121	Motor constant (R2)	0 to 50 Ω, 9999 *2	0.001 Ω *2	9999		
				0 to 400 mΩ, 9999 *3	0.01 mΩ *3			
	92	C122	Motor constant (L1)/d-axis inductance (Ld)	0 to 6000mH, 9999 *2	0.1 mH *2	9999		
				0 to 400mH, 9999 *3	0.01 mH *3			
	93	C123	Motor constant (L2)/q-axis inductance (Lq)	0 to 6000mH, 9999 *2	0.1 mH *2	9999		
				0 to 400mH, 9999 *3	0.01 mH *3			
	94	C124	Motor constant (X)	0 to 100%, 9999	0.1% *2	9999		
					0.01% *3			
	95	C111	Online auto tuning selection	0 to 2	1	0		
	96	C110	Auto tuning setting/status	0, 1, 11, 101, 131	1	0		
Adjustable 5 points V/F	100	G040	V/F1 (first frequency)	0 to 590 Hz, 9999	0.01 Hz	9999		
	101	G041	V/F1 (first frequency voltage)	0 to 1000 V	0.1 V	0 V		
	102	G042	V/F2 (second frequency)	0 to 590 Hz, 9999	0.01 Hz	9999		
	103	G043	V/F2 (second frequency voltage)	0 to 1000 V	0.1 V	0 V		
	104	G044	V/F3 (third frequency)	0 to 590 Hz, 9999	0.01 Hz	9999		
	105	G045	V/F3 (third frequency voltage)	0 to 1000 V	0.1 V	0 V		
	106	G046	V/F4 (fourth frequency)	0 to 590 Hz, 9999	0.01 Hz	9999		
	107	G047	V/F4 (fourth frequency voltage)	0 to 1000 V	0.1 V	0 V		
	108	G048	V/F5 (fifth frequency)	0 to 590 Hz, 9999	0.01 Hz	9999		
	109	G049	V/F5 (fifth frequency voltage)	0 to 1000 V	0.1 V	0 V		
Third functions	110	F030	Third acceleration/deceleration time	0 to 3600 s, 9999	0.1 s	9999		
	111	F031	Third deceleration time	0 to 3600 s, 9999	0.1 s	9999		
	112	G020	Third torque boost	0 to 30%, 9999	0.1%	9999		
	113	G021	Third V/F (base frequency)	0 to 590 Hz, 9999	0.01 Hz	9999		
	114	H602	Third stall prevention operation level	0 to 400%	0.1%	150%		
	115	H603	Third stall prevention operation frequency	0 to 590 Hz	0.01 Hz	0 Hz		
	116	M445	Third output frequency detection	0 to 590 Hz	0.01 Hz	60 Hz	50 Hz	
PU connector communication	117	N020	PU communication station number	0 to 31	1	0		
	118	N021	PU communication speed	48, 96, 192, 384, 576, 768, 1152	1	192		
	119	-	PU communication stop bit length / data length	0, 1, 10, 11	1	1		
		N022	PU communication data length	0, 1		0		
		N023	PU communication stop bit length	0, 1		1		
	120	N024	PU communication parity check	0 to 2	1	2		
	121	N025	PU communication retry count	0 to 10, 9999	1	1		
	122	N026	PU communication check time interval	0, 0.1 to 999.8 s, 9999	0.1 s	9999		
	123	N027	PU communication waiting time setting	0 to 150 ms, 9999	1 ms	9999		
	124	N028	PU communication CR/LF selection	0 to 2	1	1		

Function	Pr.	Pr. group	Name	Setting range	Minimum setting increments	Initial value FM	Initial value CA	Customer setting
–	125	T022	Terminal 2 frequency setting gain frequency Simple	0 to 590 Hz	0.01 Hz	60 Hz	50 Hz	
–	126	T042	Terminal 4 frequency setting gain frequency Simple	0 to 590 Hz	0.01 Hz	60 Hz	50 Hz	
PID operation	127	A612	PID control automatic switchover frequency	0 to 590 Hz, 9999	0.01 Hz	9999		
	128	A610	PID action selection	0, 10, 11, 20, 21, 40 to 43, 50, 51, 60, 61, 70, 71, 80, 81, 90, 91, 100, 101, 1000, 1001, 1010, 1011, 2000, 2001, 2010, 2011	1	0		
	129	A613	PID proportional band	0.1 to 1000%, 9999	0.1%	100%		
	130	A614	PID integral time	0.1 to 3600 s, 9999	0.1 s	1 s		
	131	A601	PID upper limit	0 to 100%, 9999	0.1%	9999		
	132	A602	PID lower limit	0 to 100%, 9999	0.1%	9999		
	133	A611	PID action set point	0 to 100%, 9999	0.01%	9999		
	134	A615	PID differential time	0.01 to 10 s, 9999	0.01 s	9999		
Bypass	135	A000	Electronic bypass sequence selection	0, 1	1	0		
	136	A001	MC switchover interlock time	0 to 100 s	0.1 s	1 s		
	137	A002	Start waiting time	0 to 100 s	0.1 s	0.5 s		
	138	A003	Bypass selection at a fault	0, 1	1	0		
	139	A004	Automatic switchover frequency from inverter to bypass operation	0 to 60 Hz, 8888, 9999	0.01 Hz	9999		
Backlash measures	140	F200	Backlash acceleration stopping frequency	0 to 590 Hz	0.01 Hz	1 Hz		
	141	F201	Backlash acceleration stopping time	0 to 360 s	0.1 s	0.5 s		
	142	F202	Backlash deceleration stopping frequency	0 to 590 Hz	0.01 Hz	1 Hz		
	143	F203	Backlash deceleration stopping time	0 to 360 s	0.1 s	0.5 s		
–	144	M002	Speed setting switchover	0, 2, 4, 6, 8, 10, 12, 102, 104, 106, 108, 110, 112	1	4		
PU	145	E103	PU display language selection	0 to 7	1	–		
–	147	F022	Acceleration/deceleration time switching frequency	0 to 590 Hz, 9999	0.01 Hz	9999		
Current detection	148	H620	Stall prevention level at 0 V input	0 to 400%	0.1%	150%		
	149	H621	Stall prevention level at 10 V input	0 to 400%	0.1%	200%		
	150	M460	Output current detection level	0 to 400%	0.1%	150%		
	151	M461	Output current detection signal delay time	0 to 300 s	0.1 s	0 s		
	152	M462	Zero current detection level	0 to 400%	0.1%	5%		
	153	M463	Zero current detection time	0 to 300 s	0.01 s	0.5 s		
–	154	H631	Voltage reduction selection during stall prevention operation	0, 1, 10, 11	1	1		
–	155	T730	RT signal function validity condition selection	0, 10	1	0		
–	156	H501	Stall prevention operation selection	0 to 31, 100, 101	1	0		
–	157	M430	OL signal output timer	0 to 25 s, 9999	0.1 s	0 s		
–	158	M301	AM terminal function selection	1 to 3, 5 to 14, 17, 18, 21, 24, 32 to 34, 36, 37, 46, 50, 52 to 54, 61, 62, 67, 70, 87 to 90, 91 to 98	1	1		
–	159	A005	Automatic switchover frequency range from bypass to inverter operation	0 to 10 Hz, 9999	0.01 Hz	9999		
–	160	E440	User group read selection Simple	0, 1, 9999	1	0		
–	161	E200	Frequency setting/key lock operation selection	0, 1, 10, 11	1	0		

Function	Pr.	Pr. group	Name	Setting range	Minimum setting increments	Initial value FM	Initial value CA	Customer setting
Automatic restart functions	162	A700	Automatic restart after instantaneous power failure selection	0 to 3, 10 to 13, 1000 to 1003, 1010 to 1013	1	0		
	163	A704	First cushion time for restart	0 to 20 s	0.1 s	0 s		
	164	A705	First cushion voltage for restart	0 to 100%	0.1%	0%		
	165	A710	Stall prevention operation level for restart	0 to 400%	0.1%	150%		
Current detection	166	M433	Output current detection signal retention time	0 to 10 s, 9999	0.1 s	0.1 s		
	167	M464	Output current detection operation selection	0, 1, 10, 11	1	0		
—	168	E000	Parameter for manufacturer setting. Do not set.					
		E080						
—	169	E001						
		E081						
Cumulative monitor clear	170	M020	Watt-hour meter clear	0, 10, 9999	1	9999		
	171	M030	Operation hour meter clear	0, 9999	1	9999		
User group	172	E441	User group registered display/batch clear	9999, (0 to 16)	1	0		
	173	E442	User group registration	0 to 1999, 9999	1	9999		
	174	E443	User group clear	0 to 1999, 9999	1	9999		
Input terminal function assignment	178	T700	STF terminal function selection	0 to 20, 22 to 28, 32, 37, 42 to 48, 50 to 53, 57 to 60, 62, 64 to 74, 76 to 80, 84, 85, 87 to 89, 92 to 96, 128, 129, 134, 135, 9999	1	60		
	179	T701	STR terminal function selection	0 to 20, 22 to 28, 32, 37, 42 to 48, 50 to 53, 57 to 59, 61, 62, 64 to 74, 76 to 80, 84, 85, 87 to 89, 92 to 96, 128, 129, 134, 135, 9999	1	61		
	180	T702	RL terminal function selection	0 to 20, 22 to 28, 32, 37, 42 to 48, 50 to 53, 57 to 59, 62, 64 to 74, 76 to 80, 84, 85, 87 to 89, 92 to 96, 128, 129, 134, 135, 9999	1	0		
	181	T703	RM terminal function selection		1	1		
	182	T704	RH terminal function selection		1	2		
	183	T705	RT terminal function selection		1	3		
	184	T706	AU terminal function selection		1	4		
	185	T707	JOG terminal function selection		1	5		
	186	T708	CS terminal function selection		1	6		
	187	T709	MRS terminal function selection		1	24 *11*13*14		
						10 *12*15		
	188	T710	STOP terminal function selection		1	25		
	189	T711	RES terminal function selection		1	62		

Function	Pr.	Pr. group	Name	Setting range	Minimum setting increments	Initial value FM	Initial value CA	Customer setting
Output terminal function assignment	190	M400	RUN terminal function selection	0 to 8, 10 to 20, 22, 23, 25 to 28, 30 to 36, 38 to 57, 60, 61, 63 to 68, 70, 79, 80, 84, 85, 90 to 99, 100 to 108, 110 to 116, 120, 122, 123, 125 to 128, 130 to 136, 138 to 157, 160, 161, 163 to 168, 170, 179, 180, 184, 185, 190 to 199, 200 to 208, 211 to 213, 247, 300 to 308, 311 to 313, 347, 9999 *19*22	1	0		
	191	M401	SU terminal function selection		1	1		
	192	M402	IPF terminal function selection		1	2 *11*13*14 9999 *12*15		
	193	M403	OL terminal function selection		1	3		
	194	M404	FU terminal function selection		1	4		
	195	M405	ABC1 terminal function selection	0 to 8, 10 to 20, 22, 23, 25 to 28, 30 to 36, 38 to 57, 60, 61, 63 to 68, 70, 79, 80, 84, 85, 90, 91, 94 to 99, 100 to 108, 110 to 116, 120, 122, 123, 125 to 128, 130 to 136, 138 to 157, 160, 161, 163 to 168, 170, 179, 180, 184, 185, 190, 191, 194 to 199, 200 to 208, 211 to 213, 247, 300 to 308, 311 to 313, 347, 9999 *19*22	1	99		
	196	M406	ABC2 terminal function selection		1	9999		
Online L compensation	221	C161	Excitation current compensation point 1	25 to 200%	0.1%	25%		
	222	C162	Inductance compensation rate 1	0 to 200%, 9999	0.1%	9999		
	223	C163	Excitation current compensation point 2	25 to 200%	0.1%	50%		
	224	C164	Inductance compensation rate 2	0 to 200%, 9999	0.1%	9999		
	225	C165	Excitation current compensation point 3	25 to 200%	0.1%	75%		
	226	C166	Inductance compensation rate 3	0 to 200%, 9999	0.1%	9999		
	227	C167	Excitation current compensation point 4	25 to 200%	0.1%	125%		
	228	C168	Inductance compensation rate 4	0 to 200%, 9999	0.1%	9999		
Multi-speed setting	232 to 239	D308 to D315	Multi-speed setting (8 speed to 15 speed)	0 to 590 Hz, 9999	0.01 Hz	9999		
—	240	E601	Soft-PWM operation selection	0, 1	1	1		
—	241	M043	Analog input display unit switchover	0, 1	1	0		
—	242	T021	Terminal 1 added compensation amount (terminal 2)	0 to 100%	0.1%	100%		
—	243	T041	Terminal 1 added compensation amount (terminal 4)	0 to 100%	0.1%	75%		
—	244	—	Cooling fan operation selection	0, 1, 101 to 105, 1000, 1001, 1101 to 1105	1	1		
		H100	Cooling fan operation selection	0, 1, 101 to 105	1	1		
		H106	Cooling fan operation selection during the test operation	0, 1	1	0		
Slip compensation	245	G203	Rated slip	0 to 50%, 9999	0.01%	9999		
	246	G204	Slip compensation time constant	0.01 to 10 s	0.01 s	0.5 s		
	247	G205	Constant-power range slip compensation selection	0, 9999	1	9999		
—	248	A006	Self power management selection	0 to 2	1	0		
—	249	H101	Earth (ground) fault detection at start	0 to 2	1	0		

Function	Pr.	Pr. group	Name	Setting range	Minimum setting increments	Initial value FM	Initial value CA	Customer setting
—	250	G106	Stop selection	0 to 100 s, 1000 to 1100 s, 8888, 9999	0.1 s	9999		
—	251	H200	Output phase loss protection selection	0, 1	1	1		
Frequency compensation function	252	T050	Override bias	0 to 200%	0.1%	50%		
	253	T051	Override gain	0 to 200%	0.1%	150%		
—	254	A007	Main circuit power OFF waiting time	1 to 3600 s, 9999	1 s	600 s		
Life check	255	E700	Life alarm status display	(0 to 255)	1	0		
	256 *17	E701	Inrush current limit circuit life display	(0 to 100%)	1%	100%		
	257	E702	Control circuit capacitor life display	(0 to 100%)	1%	100%		
	258 *17	E703	Main circuit capacitor life display	(0 to 100%)	1%	100%		
	259 *17	E704	Main circuit capacitor life measuring	0, 1, 11	1	0		
—	260 *21	E602	PWM frequency automatic switchover	0, 1	1	1		
Power failure stop	261	A730	Power failure stop selection	0 to 2, 11, 12, 21, 22	1	0		
	262	A731	Subtracted frequency at deceleration start	0 to 20 Hz	0.01 Hz	3 Hz		
	263	A732	Subtraction starting frequency	0 to 590 Hz, 9999	0.01 Hz	60 Hz	50 Hz	
	264	A733	Power-failure deceleration time 1	0 to 3600 s	0.1 s	5 s		
	265	A734	Power-failure deceleration time 2	0 to 3600 s, 9999	0.1 s	9999		
	266	A735	Power failure deceleration time switchover frequency	0 to 590 Hz	0.01 Hz	60 Hz	50 Hz	
—	267	T001	Terminal 4 input selection	0 to 2	1	0		
—	268	M022	Monitor decimal digits selection	0, 1, 9999	1	9999		
—	269	E023	Parameter for manufacturer setting. Do not set.					
—	270	A200	Stop-on contact/load torque high-speed frequency control selection	0 to 3, 11, 13	1	0		
Load torque high speed frequency control	271	A201	High-speed setting maximum current	0 to 400%	0.1%	50%		
	272	A202	Middle-speed setting minimum current	0 to 400%	0.1%	100%		
	273	A203	Current averaging range	0 to 590 Hz, 9999	0.01 Hz	9999		
	274	A204	Current averaging filter time constant	1 to 4000	1	16		
Stop-on contact control	275	A205	Stop-on contact excitation current low-speed multiplying factor	0 to 300%, 9999	0.1%	9999		
	276 *21	A206	PWM carrier frequency at stop-on contact	0 to 9, 9999 *2 0 to 4, 9999 *3	1	9999		
Brake sequence function	278	A100	Brake opening frequency	0 to 30 Hz	0.01 Hz	3 Hz		
	279	A101	Brake opening current	0 to 400%	0.1%	130%		
	280	A102	Brake opening current detection time	0 to 2 s	0.1 s	0.3 s		
	281	A103	Brake operation time at start	0 to 5 s	0.1 s	0.3 s		
	282	A104	Brake operation frequency	0 to 30 Hz	0.01 Hz	6 Hz		
	283	A105	Brake operation time at stop	0 to 5 s	0.1 s	0.3 s		
	284	A106	Deceleration detection function selection	0, 1	1	0		
	285	A107	Overspeed detection frequency	0 to 30 Hz, 9999	0.01 Hz	9999		
		H416	Speed deviation excess detection frequency					
Droop control	286	G400	Droop gain	0 to 100%	0.1%	0%		
	287	G401	Droop filter time constant	0 to 1 s	0.01 s	0.3 s		
	288	G402	Droop function activation selection	0 to 2, 10, 11, 20 to 22	1	0		
—	289	M431	Inverter output terminal filter	5 to 50 ms, 9999	1 ms	9999		
—	290	M044	Monitor negative output selection	0 to 7	1	0		

Function	Pr.	Pr. group	Name	Setting range	Minimum setting increments	Initial value FM	Initial value CA	Customer setting
–	291	D100	Pulse train I/O selection	[FM Type] 0, 1, 10, 11, 20, 21, 100 [CA Type] 0, 1	1	0		
–	292	F500 A110	Automatic acceleration/deceleration	0, 1, 3, 5 to 8, 11	1	0		
–	293	F513	Acceleration/deceleration separate selection	0 to 2	1	0		
–	294	A785	UV avoidance voltage gain	0 to 200%	0.1%	100%		
–	295	E201	Frequency change increment amount setting	0, 0.01, 0.1, 1, 10	0.01	0		
Password function	296	E410	Password lock level	0 to 6, 99, 100 to 106, 199, 9999	1	9999		
	297	E411	Password lock/unlock	(0 to 5), 1000 to 9998, 9999	1	9999		
–	298	A711	Frequency search gain	0 to 32767, 9999	1	9999		
–	299	A701	Rotation direction detection selection at restarting	0, 1, 9999	1	0		
CC-Link IE	313 *24	M410	DO0 output selection	0 to 8, 10 to 20, 22, 23, 25 to 28, 30 to 36, 38 to 57, 60, 61, 63 to 66, 68, 70, 79, 80, 84 to 99, 100 to 108, 110 to 116, 120, 122, 123, 125 to 128, 130 to 136, 138 to 157, 160, 161, 163 to 166, 168, 170, 179, 180, 184 to 199, 200 to 208, 247 to 250, 300 to 308, 347 to 350, 9999 *19	1	9999		
	314 *24	M411	DO1 output selection		1	9999		
	315 *24	M412	DO2 output selection		1	9999		
RS-485 communication	331 *20*21	N030	RS-485 communication station number	0 to 31 (0 to 247)	1	0		
	332 *20*21	N031	RS-485 communication speed	3, 6, 12, 24, 48, 96, 192, 384, 576, 768, 1152	1	96		
	333 *20*21	-	RS-485 communication stop bit length / data length	0, 1, 10, 11	1	1		
		N032	PU communication data length	0, 1	1	0		
		N033	PU communication stop bit length	0, 1	1	1		
	334 *20*21	N034	RS-485 communication parity check selection	0 to 2	1	2		
	335 *20*21	N035	RS-485 communication retry count	0 to 10, 9999	1	1		
	336 *20*21	N036	RS-485 communication check time interval	0 to 999.8 s, 9999	0.1 s	0 s		
	337 *20*21	N037	RS-485 communication waiting time setting	0 to 150 ms, 9999	1 ms	9999		
	338	D010	Communication operation command source	0, 1	1	0		
	339	D011	Communication speed command source	0 to 2	1	0		
	340	D001	Communication startup mode selection	0 to 2, 10, 12	1	0		
	341 *20*21	N038	RS-485 communication CR/LF selection	0 to 2	1	1		
	342	N001	Communication EEPROM write selection	0, 1	1	0		
	343 *20*21	N080	Communication error count	-	1	0		

Function	Pr.	Pr. group	Name	Setting range	Minimum setting increments	Initial value FM	Initial value CA	Customer setting
–	349 *24	-	Communication reset selection/ Ready bit status selection/Reset selection when inverter errors cleared/DriveControl writing restriction selection	0, 1, 100, 101, 1000, 1001, 1100, 1101, 10000, 10001, 10100, 10101, 11000, 11001, 11100, 11101	1	0		
		N010	Communication reset selection	0, 1	1	0		
		N240	Ready bit status selection	0, 1	1	0		
		N241 *25	Reset selection when inverter errors cleared	0, 1	1	0		
		N242 *25	DriveControl writing restriction selection	0, 1	1	0		
Orientation control	350 *9	A510	Stop position command selection	0, 1, 9999	1	9999		
	351 *9	A526	Orientation speed	0 to 30 Hz	0.01 Hz	2 Hz		
	352 *9	A527	Creep speed	0 to 10 Hz	0.01 Hz	0.5 Hz		
	353 *9	A528	Creep switchover position	0 to 16383	1	511		
	354 *9	A529	Position loop switchover position	0 to 8191	1	96		
	355 *9	A530	DC injection brake start position	0 to 255	1	5		
	356 *9	A531	Internal stop position command	0 to 16383	1	0		
	357 *9	A532	Orientation in-position zone	0 to 255	1	5		
	358 *9	A533	Servo torque selection	0 to 13	1	1		
	359 *9	C141	Encoder rotation direction	0, 1, 100, 101	1	1		
	360 *9	A511	16-bit data selection	0 to 127	1	0		
	361 *9	A512	Position shift	0 to 16383	1	0		
	362 *9	A520	Orientation position loop gain	0.1 to 100	0.1	1		
	363 *9	A521	Completion signal output delay time	0 to 5 s	0.1 s	0.5 s		
	364 *9	A522	Encoder stop check time	0 to 5 s	0.1 s	0.5 s		
	365 *9	A523	Orientation limit	0 to 60 s, 9999	1 s	9999		
	366 *9	A524	Recheck time	0 to 5 s, 9999	0.1 s	9999		
Encoder feedback	367 *9	G240	Speed feedback range	0 to 590 Hz, 9999	0.01 Hz	9999		
	368 *9	G241	Feedback gain	0 to 100	0.1	1		
	369 *9	C140	Number of encoder pulses	0 to 4096	1	1024		
	373 *9	C142	Encoder position tuning setting/ status	0, 1	1	0		
	374	H800	Overspeed detection level	0 to 590 Hz, 9999	0.01 Hz	9999		
	376 *9	C148	Encoder signal loss detection enable/disable selection	0, 1	1	0		
S-pattern acceleration/ deceleration C	380	F300	Acceleration S-pattern 1	0 to 50%	1%	0%		
	381	F301	Deceleration S-pattern 1	0 to 50%	1%	0%		
	382	F302	Acceleration S-pattern 2	0 to 50%	1%	0%		
	383	F303	Deceleration S-pattern 2	0 to 50%	1%	0%		
Pulse train input	384	D101	Input pulse division scaling factor	0 to 250	1	0		
	385	D110	Frequency for zero input pulse	0 to 590 Hz	0.01 Hz	0 Hz		
	386	D111	Frequency for maximum input pulse	0 to 590 Hz	0.01 Hz	60 Hz	50 Hz	
Orientation control	393 *9	A525	Orientation selection	0 to 2, 10 to 12	1	0		
	394 *9	A540	Number of machine side gear teeth	0 to 32767	1	1		
	395 *9	A541	Number of motor side gear teeth	0 to 32767	1	1		
	396 *9	A542	Orientation speed gain (P term)	0 to 1000	1	60		
	397 *9	A543	Orientation speed integral time	0 to 20 s	0.001 s	0.333 s		
	398 *9	A544	Orientation speed gain (D term)	0 to 100	0.1	1		
	399 *9	A545	Orientation deceleration ratio	0 to 1000	1	20		
–	413 *9	M601	Encoder pulse division ratio	1 to 32767	1	1		
PLC function	414	A800	PLC function operation selection	0 to 2, 11, 12	1	0		
	415	A801	Inverter operation lock mode setting	0, 1	1	0		
	416	A802	Pre-scale function selection	0 to 5	1	0		
	417	A803	Pre-scale setting value	0 to 32767	1	1		

Function	Pr.	Pr. group	Name	Setting range	Minimum setting increments	Initial value FM	Initial value CA	Customer setting
Position control	419	B000	Position command source selection	0 to 2, 10, 100, 110, 200, 210, 300, 310, 1110, 1310	1	0		
	420	B001	Command pulse scaling factor numerator (electronic gear numerator)	1 to 32767	1	1		
	421	B002	Command pulse multiplication denominator (electronic gear denominator)	1 to 32767	1	1		
	422	B003	Position control gain	0 to 150 sec^{-1}	1 sec^{-1}	25 sec^{-1}		
	423	B004	Position feed forward gain	0 to 100%	1%	0%		
	424	B005	Position command acceleration/ deceleration time constant	0 to 50 s	0.001 s	0 s		
	425	B006	Position feed forward command filter	0 to 5 s	0.001 s	0 s		
	426	B007	In-position width	0 to 32767 pulse	1 pulse	100 pulse		
	427	B008	Excessive level error	0 to 400K pulse, 9999	1K pulse	40K pulse		
	428	B009	Command pulse selection	0 to 5	1	0		
	429	B010	Clear signal selection	0, 1	1	1		
	430	B011	Pulse monitor selection	0 to 5, 12, 13, 100 to 105, 112, 113, 1000 to 1005, 1012, 1013, 1100 to 1105, 1112, 1113, 2000 to 2005, 2012, 2013, 2100 to 2105, 2112, 2113, 3000 to 3005, 3012, 3013, 3100 to 3105, 3112, 3113, 8888, 9999	1	9999		
–	432 *9	D120	Pulse train torque command bias	0 to 400%	1%	0%		
–	433 *9	D121	Pulse train torque command gain	0 to 400%	1%	150%		
CC-Link IE	434 *18	N110	Network number (CC-Link IE)	0 to 255	1	0		
	435 *18	N111	Station number (CC-Link IE)	0 to 255	1	0		
–	446	B012	Model position control gain	0 to 150 sec^{-1}	1 sec^{-1}	25 sec^{-1}		
Second motor constants	450	C200	Second applied motor	0, 1, 3 to 6, 13 to 16, 20, 23, 24, 30, 33, 34, 40, 43, 44, 50, 53, 54, 70, 73, 74, 330, 333, 334, 1140, 8090, 8093, 8094, 9090, 9093, 9094, 9999	1	9999		
	451	G300	Second motor control method selection	0 to 6, 10 to 14, 20, 100 to 106, 110 to 114, 9999	1	9999		
	453	C201	Second motor capacity	0.4 to 55 kW, 9999 *2	0.01 kW *2	9999		
				0 to 3600 kW, 9999 *3	0.1 kW *3			
	454	C202	Number of second motor poles	2, 4, 6, 8, 10, 12, 9999	1	9999		
	455	C225	Second motor excitation current	0 to 500 A, 9999 *2	0.01 A *2	9999		
				0 to 3600 A, 9999 *3	0.1 A *3			
	456	C204	Rated second motor voltage	0 to 1000 V	0.1 V	200 V *7		
						400 V *8		
	457	C205	Rated second motor frequency	10 to 400 Hz, 9999	0.01 Hz	9999		
	458	C220	Second motor constant (R1)	0 to 50 Ω, 9999 *2	0.001 Ω *2	9999		
				0 to 400 mΩ, 9999 *3	0.01 mΩ *3			
	459	C221	Second motor constant (R2)	0 to 50 Ω, 9999 *2	0.001 Ω*2	9999		
				0 to 400 mΩ, 9999 *3	0.01 mΩ *3			
	460	C222	Second motor constant (L1) / d-axis inductance (Ld)	0 to 6000mH, 9999 *2	0.1 mH *2	9999		
				0 to 400mH, 9999 *3	0.01 mH *3			
	461	C223	Second motor constant (L2) / q-axis inductance (Lq)	0 to 6000mH, 9999 *2	0.1 mH *2	9999		
				0 to 400mH, 9999 *3	0.01 mH *3			
	462	C224	Second motor constant (X)	0 to 100%, 9999	0.1% *2	9999		
					0.01% *3			
	463	C210	Second motor auto tuning setting/ status	0, 1, 11, 101	1	0		

Function	Pr.	Pr. group	Name	Setting range	Minimum setting increments	Initial value FM	Initial value CA	Customer setting
Simple position control	464	B020	Digital position control sudden stop deceleration time	0 to 360 s	0.1 s	0 s		
	465	B021	First target position lower 4 digits	0 to 9999	1	0		
	466	B022	First target position upper 4 digits	0 to 9999	1	0		
	467	B023	Second target position lower 4 digits	0 to 9999	1	0		
	468	B024	Second target position upper 4 digits	0 to 9999	1	0		
	469	B025	Third target position lower 4 digits	0 to 9999	1	0		
	470	B026	Third target position upper 4 digits	0 to 9999	1	0		
	471	B027	Fourth target position lower 4 digits	0 to 9999	1	0		
	472	B028	Fourth target position upper 4 digits	0 to 9999	1	0		
	473	B029	Fifth target position lower 4 digits	0 to 9999	1	0		
	474	B030	Fifth target position upper 4 digits	0 to 9999	1	0		
	475	B031	Sixth target position lower 4 digits	0 to 9999	1	0		
	476	B032	Sixth target position upper 4 digits	0 to 9999	1	0		
	477	B033	Seventh target position lower 4 digits	0 to 9999	1	0		
	478	B034	Seventh target position upper 4 digits	0 to 9999	1	0		
	479	B035	Eighth target position lower 4 digits	0 to 9999	1	0		
	480	B036	Eighth target position upper 4 digits	0 to 9999	1	0		
	481	B037	Ninth target position lower 4 digits	0 to 9999	1	0		
	482	B038	Ninth target position upper 4 digits	0 to 9999	1	0		
	483	B039	Tenth target position lower 4 digits	0 to 9999	1	0		
	484	B040	Tenth target position upper 4 digits	0 to 9999	1	0		
	485	B041	Eleventh target position lower 4 digits	0 to 9999	1	0		
	486	B042	Eleventh target position upper 4 digits	0 to 9999	1	0		
	487	B043	Twelfth target position lower 4 digits	0 to 9999	1	0		
	488	B044	Twelfth target position upper 4 digits	0 to 9999	1	0		
	489	B045	Thirteenth target position lower 4 digits	0 to 9999	1	0		
	490	B046	Thirteenth target position upper 4 digits	0 to 9999	1	0		
	491	B047	Fourteenth target position lower 4 digits	0 to 9999	1	0		
	492	B048	Fourteenth target position upper 4 digits	0 to 9999	1	0		
	493	B049	Fifteenth target position lower 4 digits	0 to 9999	1	0		
	494	B050	Fifteenth target position upper 4 digits	0 to 9999	1	0		
Remote output	495	M500	Remote output selection	0, 1, 10, 11	1	0		
	496	M501	Remote output data 1	0 to 4095	1	0		
	497	M502	Remote output data 2	0 to 4095	1	0		
—	498	A804	PLC function flash memory clear	0, 9696 (0 to 9999)	1	0		
—	500 *24	N011	Communication error execution waiting time	0 to 999.8 s	0.1 s	0 s		
—	501 *24	N012	Communication error occurrence count display	0	1	0		
—	502	N013	Stop mode selection at communication error	0 to 4, 11, 12	1	0		
Maintenance	503	E710	Maintenance timer 1	0 (1 to 9998)	1	0		
	504	E711	Maintenance timer 1 warning output set time	0 to 9998, 9999	1	9999		
—	505	M001	Speed setting reference	1 to 590 Hz	0.01 Hz	60 Hz	50 Hz	
—	506 *17	E705	Display estimated main circuit capacitor residual life	(0 to 100%)	1%	100%		

Function	Pr.	Pr. group	Name	Setting range	Minimum setting increments	Initial value FM	Initial value CA	Customer setting
–	507	E706	Display/reset ABC1 relay contact life	0 to 100%	1%	100%		
–	508	E707	Display/reset ABC2 relay contact life	0 to 100%	1%	100%		
–	514	H324	Emergency drive dedicated retry waiting time	0.1 to 600 s, 9999	0.1 s	9999		
–	515	H322	Emergency drive dedicated retry count	1 to 200, 9999	1	1		
S-pattern acceleration/ deceleration D	516	F400	S-pattern time at a start of acceleration	0.1 to 2.5 s	0.1 s	0.1 s		
	517	F401	S-pattern time at a completion of acceleration	0.1 to 2.5 s	0.1 s	0.1 s		
	518	F402	S-pattern time at a start of deceleration	0.1 to 2.5 s	0.1 s	0.1 s		
	519	F403	S-pattern time at a completion of deceleration	0.1 to 2.5 s	0.1 s	0.1 s		
–	521	H194	Output short-circuit detection	0, 1	1	0		
–	522	G105	Output stop frequency	0 to 590 Hz, 9999	0.01 Hz	9999		
–	523	H320	Emergency drive mode selection	100, 111, 112, 121 to 124, 200, 211, 212, 221 to 224, 300, 311, 312, 321 to 324, 400, 411, 412, 421 to 424, 9999	1	9999		
–	524	H321	Emergency drive running speed	0 to 590 Hz, 9999	0.01 Hz	9999		
–	539 *20*21	N002	MODBUS RTU communication check time interval	0 to 999.8 s, 9999	0.1 s	9999		
–	541 *24	N100	Frequency command sign selection	0, 1	1	0		
USB	547	N040	USB communication station number	0 to 31	1	0		
	548	N041	USB communication check time interval	0 to 999.8 s, 9999	0.1 s	9999		
Communication	549 *20*21	N000	Protocol selection	0, 1	1	0		
	550 *21	D012	NET mode operation command source selection	0, 1, 9999 *19	1	9999		
	551	D013	PU mode operation command source selection	1 to 3, 9999 *19	1	9999		
–	552	H429	Frequency jump range	0 to 30 Hz, 9999	0.01 Hz	9999		
PID control	553	A603	PID deviation limit	0 to 100%, 9999	0.1%	9999		
	554	A604	PID signal operation selection	0 to 3, 10 to 13	1	0		
Current average value monitor	555	E720	Current average time	0.1 to 1 s	0.1 s	1 s		
	556	E721	Data output mask time	0 to 20 s	0.1 s	0 s		
	557	E722	Current average value monitor signal output reference current	0 to 500 A *2	0.01 A *2	Inverter rated current		
				0 to 3600 A *3	0.1 A *3			
–	560	A712	Second frequency search gain	0 to 32767, 9999	1	9999		
–	561	H020	PTC thermistor protection level	0.5 to 30 kΩ, 9999	0.01 kΩ	9999		
–	563	M021	Energization time carrying-over times	(0 to 65535)	1	0		
–	564	M031	Operating time carrying-over times	(0 to 65535)	1	0		
–	565	G301	Second motor excitation current break point	0 to 400 Hz, 9999	0.01 Hz	9999		
–	566	G302	Second motor excitation current low-speed scaling factor	0 to 300%, 9999	0.1%	9999		
Second motor constants	569	G942	Second motor speed control gain	0 to 200%, 9999	0.1%	9999		

Function	Pr.	Pr. group	Name	Setting range	Minimum setting increments	Initial value FM	Initial value CA	Customer setting
Multiple rating	570	E301	Multiple rating setting	0 to 3 *11*12	1	2		
				1, 2 *13				
				0, 2 *14*15				
—	571	F103	Holding time at a start	0 to 60 s, 9999	0.1 s	9999		
—	573	A680 / T052	4 mA input check selection	1 to 4, 11 to 14, 21 to 24, 9999	1	9999		
—	574	C211	Second motor online auto tuning	0 to 2	1	0		
PID control	575	A621	Output interruption detection time	0 to 3600 s, 9999	0.1 s	1 s		
	576	A622	Output interruption detection level	0 to 590 Hz	0.01 Hz	0 Hz		
	577	A623	Output interruption cancel level	900 to 1100%	0.1%	1000%		
Traverse function	592	A300	Traverse function selection	0 to 2	1	0		
	593	A301	Maximum amplitude amount	0 to 25%	0.1%	10%		
	594	A302	Amplitude compensation amount during deceleration	0 to 50%	0.1%	10%		
	595	A303	Amplitude compensation amount during acceleration	0 to 50%	0.1%	10%		
	596	A304	Amplitude acceleration time	0.1 to 3600 s	0.1 s	5 s		
	597	A305	Amplitude deceleration time	0.1 to 3600 s	0.1 s	5 s		
—	598	H102	Undervoltage level	175 to 215 VDC, 9999 *7	0.1 V	9999		
				350 to 430 VDC, 9999 *8				
—	599	T721	X10 terminal input selection	0, 1	1	0 *11*13*14		
						1 *12*15		
Electronic thermal O/L relay	600	H001	First free thermal reduction frequency 1	0 to 590 Hz, 9999	0.01 Hz	9999		
	601	H002	First free thermal reduction ratio 1	1 to 100%	1%	100%		
	602	H003	First free thermal reduction frequency 2	0 to 590 Hz, 9999	0.01 Hz	9999		
	603	H004	First free thermal reduction ratio 2	1 to 100%	1%	100%		
	604	H005	First free thermal reduction frequency 3	0 to 590 Hz, 9999	0.01 Hz	9999		
—	606	T722	Power failure stop external signal input selection	0, 1	1	1		
—	607	H006	Motor permissible load level	110 to 250%	1%	150%		
—	608	H016	Second motor permissible load level	110 to 250%, 9999	1%	9999		
PID control	609	A624	PID set point/deviation input selection	1 to 5	1	2		
	610	A625	PID measured value input selection	1 to 5	1	3		
—	611	F003	Acceleration time at a restart	0 to 3600 s, 9999	0.1 s	9999		
—	617	G080	Reverse rotation excitation current low-speed scaling factor	0 to 300%, 9999	0.1%	9999		
Cumulative pulse monitor	635 *9	M610	Cumulative pulse clear signal selection	0 to 3	1	0		
	636 *9	M611	Cumulative pulse division scaling factor	1 to 16384	1	1		
	637 *9	M612	Control terminal option-Cumulative pulse division scaling factor	1 to 16384	1	1		
	638 *9	M613	Cumulative pulse storage	0 to 3	1	0		

Function	Pr.	Pr. group	Name	Setting range	Minimum setting increments	Initial value FM	Initial value CA	Customer setting
Brake sequence function	639	A108	Brake opening current selection	0, 1	1	0		
	640	A109	Brake operation frequency selection	0, 1	1	0		
	641	A130	Second brake sequence operation selection	0, 7, 8, 9999	1	0		
	642	A120	Second brake opening frequency	0 to 30 Hz	0.01 Hz	3 Hz		
	643	A121	Second brake opening current	0 to 400%	0.1%	130%		
	644	A122	Second brake opening current detection time	0 to 2 s	0.1 s	0.3 s		
	645	A123	Second brake operation time at start	0 to 5 s	0.1 s	0.3 s		
	646	A124	Second brake operation frequency	0 to 30 Hz	0.01 Hz	6 Hz		
	647	A125	Second brake operation time at stop	0 to 5 s	0.1 s	0.3 s		
	648	A126	Second deceleration detection function selection	0, 1	1	0		
	650	A128	Second brake opening current selection	0, 1	1	0		
	651	A129	Second brake operation frequency selection	0, 1	1	0		
Speed smoothing control	653	G410	Speed smoothing control	0 to 200%	0.1%	0%		
	654	G411	Speed smoothing cutoff frequency	0 to 120 Hz	0.01 Hz	20 Hz		
Analog remote output function	655	M530	Analog remote output selection	0, 1, 10, 11	1	0		
	656	M531	Analog remote output 1	800 to 1200%	0.1%	1000%		
	657	M532	Analog remote output 2	800 to 1200%	0.1%	1000%		
	658	M533	Analog remote output 3	800 to 1200%	0.1%	1000%		
	659	M534	Analog remote output 4	800 to 1200%	0.1%	1000%		
Increased magnetic excitation deceleration	660	G130	Increased magnetic excitation deceleration operation selection	0, 1	1	0		
	661	G131	Magnetic excitation increase rate	0 to 40%, 9999	0.1%	9999		
	662	G132	Increased magnetic excitation current level	0 to 300%	0.1%	100%		
—	663	M060	Control circuit temperature signal output level	0 to 100°C	1°C	0°C		
—	665	G125	Regeneration avoidance frequency gain	0 to 200%	0.1%	100%		
—	668	A786	Power failure stop frequency gain	0 to 200%	0.1%	100%		
—	673 *21	G060	SF-PR slip amount adjustment operation selection	2, 4, 6, 9999	1	9999		
—	674 *21	G061	SF-PR slip amount adjustment gain	0 to 500%	0.1%	100%		
—	675	A805	User parameter auto storage function selection	1, 9999	1	9999		
Second droop control	679	G420	Second droop gain	0 to 100%, 9999	0.1%	9999		
	680	G421	Second droop filter time constant	0 to 1 s, 9999	0.01 s	9999		
	681	G422	Second droop function activation selection	0 to 2, 10, 11, 20 to 22, 9999	1	9999		
	682	G423	Second droop break point gain	0.1 to 100%, 9999	0.1%	9999		
	683	G424	Second droop break point torque	0.1 to 100%, 9999	0.1%	9999		
—	684	C000	Tuning data unit switchover	0, 1	1	0		
Maintenance	686	E712	Maintenance timer 2	0 (1 to 9998)	1	0		
	687	E713	Maintenance timer 2 warning output set time	0 to 9998, 9999	1	9999		
	688	E714	Maintenance timer 3	0 (1 to 9998)	1	0		
	689	E715	Maintenance timer 3 warning output set time	0 to 9998, 9999	1	9999		
—	690	H881	Deceleration check time	0 to 3600 s, 9999	0.1 s	1 s		

Function	Pr.	Pr. group	Name	Setting range	Minimum setting increments	Initial value FM	Initial value CA	Customer setting
Electronic thermal O/L relay	692	H011	Second free thermal reduction frequency 1	0 to 590 Hz, 9999	0.01 Hz	9999		
	693	H012	Second free thermal reduction ratio 1	1 to 100%	1%	100%		
	694	H013	Second free thermal reduction frequency 2	0 to 590 Hz, 9999	0.01 Hz	9999		
	695	H014	Second free thermal reduction ratio 2	1 to 100%	1%	100%		
	696	H015	Second free thermal reduction frequency 3	0 to 590 Hz, 9999	0.01 Hz	9999		
—	699	T740	Input terminal filter	5 to 50 ms, 9999	1 ms	9999		
Motor constants	702 *21	C106	Maximum motor frequency	0 to 400 Hz, 9999	0.01 Hz	9999		
	706 *21	C130	Induced voltage constant (phi f)	0 to 5000 mV/(rad/s), 9999	0.1 mV/(rad/s)	9999		
	707	C107	Motor inertia (integer)	10 to 999, 9999	1	9999		
	711 *21	C131	Motor Ld decay ratio	0 to 100%, 9999	0.1%	9999		
	712 *21	C132	Motor Lq decay ratio	0 to 100%, 9999	0.1%	9999		
	717 *21	C182	Starting resistance tuning compensation	0 to 200%, 9999	0.1%	9999		
	721 *21	C185	Starting magnetic pole position detection pulse width	0 to 6000 μs, 10000 to 16000 μs, 9999	1 μs	9999		
	724	C108	Motor inertia (exponent)	0 to 7, 9999	1	9999		
	725 *21	C133	Motor protection current level	100 to 500%, 9999	0.1%	9999		
	738 *21	C230	Second motor induced voltage constant (phi f)	0 to 5000 mV/(rad/s), 9999	0.1 mV/(rad/s)	9999		
	739 *21	C231	Second motor Ld decay ratio	0 to 100%, 9999	0.1%	9999		
	740 *21	C232	Second motor Lq decay ratio	0 to 100%, 9999	0.1%	9999		
	741 *21	C282	Second starting resistance tuning compensation	0 to 200%, 9999	0.1%	9999		
	742 *21	C285	Second motor magnetic pole detection pulse width	0 to 6000 μs, 10000 to 16000 μs, 9999	1 μs	9999		
	743 *21	C206	Second motor maximum frequency	0 to 400 Hz, 9999	0.01 Hz	9999		
	744	C207	Second motor inertia (integer)	10 to 999, 9999	1	9999		
	745	C208	Second motor inertia (exponent)	0 to 7, 9999	1	9999		
	746 *21	C233	Second motor protection current level	100 to 500%, 9999	0.1%	9999		
—	747 *21	G350	Second motor low-speed range torque characteristic selection	0, 9999	1	9999		
PID control	753	A650	Second PID action selection	0, 10, 11, 20, 21, 50, 51, 60, 61, 70, 71, 80, 81, 90, 91, 100, 101, 1000, 1001, 1010, 1011, 2000, 2001, 2010, 2011	1	0		
	754	A652	Second PID control automatic switchover frequency	0 to 590 Hz, 9999	0.01 Hz	9999		
	755	A651	Second PID action set point	0 to 100%, 9999	0.01%	9999		
	756	A653	Second PID proportional band	0.1 to 1000%, 9999	0.1%	100%		
	757	A654	Second PID integral time	0.1 to 3600 s, 9999	0.1 s	1 s		
	758	A655	Second PID differential time	0.01 to 10 s, 9999	0.01 s	9999		
	759	A600	PID unit selection	0 to 43, 9999	1	9999		
PID pre-charge function	760	A616	Pre-charge fault selection	0, 1	1	0		
	761	A617	Pre-charge ending level	0 to 100%, 9999	0.1%	9999		
	762	A618	Pre-charge ending time	0 to 3600 s, 9999	0.1 s	9999		
	763	A619	Pre-charge upper detection level	0 to 100%, 9999	0.1%	9999		
	764	A620	Pre-charge time limit	0 to 3600 s, 9999	0.1 s	9999		
	765	A656	Second pre-charge fault selection	0, 1	1	0		
	766	A657	Second pre-charge ending level	0 to 100%, 9999	0.1%	9999		
	767	A658	Second pre-charge ending time	0 to 3600 s, 9999	0.1 s	9999		
	768	A659	Second pre-charge upper detection level	0 to 100%, 9999	0.1%	9999		
	769	A660	Second pre-charge time limit	0 to 3600 s, 9999	0.1 s	9999		

Function	Pr.	Pr. group	Name	Setting range	Minimum setting increments	Initial value FM	Initial value CA	Customer setting
Monitor function	774	M101	Operation panel monitor selection 1	1 to 3, 5 to 14, 17 to 20, 22 to 46, 50 to 57, 61, 62, 64, 67, 68, 71 to 75, 87 to 98, 100, 9999	1	9999		
	775	M102	Operation panel monitor selection 2		1	9999		
	776	M103	Operation panel monitor selection 3		1	9999		
—	777	A681 T053	4 mA input check operation frequency	0 to 590 Hz, 9999	0.01 Hz	9999		
—	778	A682 T054	4 mA input check filter	0 to 10 s	0.01 s	0 s		
—	779	N014	Operation frequency during communication error	0 to 590 Hz, 9999	0.01 Hz	9999		
—	788 *21	G250	Low speed range torque characteristic selection	0, 9999	1	9999		
—	791 *21	F070	Acceleration time in low-speed range	0 to 3600 s, 9999	0.1 s	9999		
—	792 *21	F071	Deceleration time in low-speed range	0 to 3600 s, 9999	0.1 s	9999		
—	799	M520	Pulse increment setting for output power	0.1, 1, 10, 100, 1000 kWh	0.1 kWh	1 kWh		
—	800	G200	Control method selection	0 to 6, 9 to 14, 20, 100 to 106, 109 to 114	1	20		
—	801	H704	Output limit level	0 to 400%, 9999	0.1%	9999		
—	802	G102	Pre-excitation selection	0, 1	1	0		
Torque command	803	G210	Constant output range torque characteristic selection	0 to 2, 10, 11	1	0		
	804	D400	Torque command source selection	0 to 6	1	0		
	805	D401	Torque command value (RAM)	600 to 1400%	1%	1000%		
	806	D402	Torque command value (RAM, EEPROM)	600 to 1400%	1%	1000%		
Speed limit	807	H410	Speed limit selection	0 to 2	1	0		
	808	H411	Forward rotation speed limit/speed limit	0 to 400 Hz	0.01 Hz	60 Hz	50 Hz	
	809	H412	Reverse rotation speed limit/reverse-side speed limit	0 to 400 Hz, 9999	0.01 Hz	9999		
Torque limit	810	H700	Torque limit input method selection	0 to 2	1	0		
	811	D030	Set resolution switchover	0, 1, 10, 11	1	0		
	812	H701	Torque limit level (regeneration)	0 to 400%, 9999	0.1%	9999		
	813	H702	Torque limit level (3rd quadrant)	0 to 400%, 9999	0.1%	9999		
	814	H703	Torque limit level (4th quadrant)	0 to 400%, 9999	0.1%	9999		
	815	H710	Torque limit level 2	0 to 400%, 9999	0.1%	9999		
	816	H720	Torque limit level during acceleration	0 to 400%, 9999	0.1%	9999		
	817	H721	Torque limit level during deceleration	0 to 400%, 9999	0.1%	9999		
Easy gain tuning	818	C112	Easy gain tuning response level setting	1 to 15	1	2		
	819	C113	Easy gain tuning selection	0 to 2	1	0		

Function	Pr.	Pr. group	Name	Setting range	Minimum setting increments	Initial value FM	Initial value CA	Customer setting
Adjustment function	820	G211	Speed control P gain 1	0 to 1000%	1%	60%		
	821	G212	Speed control integral time 1	0 to 20 s	0.001 s	0.333 s		
	822	T003	Speed setting filter 1	0 to 5 s, 9999	0.001 s	9999		
	823 *9	G215	Speed detection filter 1	0 to 0.1 s	0.001 s	0.001 s		
	824	G213	Torque control P gain 1 (current loop proportional gain)	0 to 500%	1%	100%		
	825	G214	Torque control integral time 1 (current loop integral time)	0 to 500 ms	0.1 ms	5 ms		
	826	T004	Torque setting filter 1	0 to 5 s, 9999	0.001 s	9999		
	827	G216	Torque detection filter 1	0 to 0.1 s	0.001 s	0 s		
	828	G224	Model speed control gain	0 to 1000%	1%	60%		
	829 *9	A546	Number of machine end encoder pulses	0 to 4096	1	9999		
	830	G311	Speed control P gain 2	0 to 1000%, 9999	1%	9999		
	831	G312	Speed control integral time 2	0 to 20 s, 9999	0.001 s	9999		
	832	T005	Speed setting filter 2	0 to 5 s, 9999	0.001 s	9999		
	833 *9	G315	Speed detection filter 2	0 to 0.1 s, 9999	0.001 s	9999		
	834	G313	Torque control P gain 2	0 to 500%, 9999	1%	9999		
	835	G314	Torque control integral time 2	0 to 500 ms, 9999	0.1 ms	9999		
	836	T006	Torque setting filter 2	0 to 5 s, 9999	0.001 s	9999		
	837	G316	Torque detection filter 2	0 to 0.1 s, 9999	0.001 s	9999		
Torque bias	840	G230	Torque bias selection	0 to 3, 24, 25, 9999	1	9999		
	841	G231	Torque bias 1	600 to 1400%, 9999	1%	9999		
	842	G232	Torque bias 2	600 to 1400%, 9999	1%	9999		
	843	G233	Torque bias 3	600 to 1400%, 9999	1%	9999		
	844	G234	Torque bias filter	0 to 5s, 9999	0.001 s	9999		
	845	G235	Torque bias operation time	0 to 5s, 9999	0.01 s	9999		
	846	G236	Torque bias balance compensation	0 to 10 V, 9999	0.1 V	9999		
	847	G237	Fall-time torque bias terminal 1 bias	0 to 400%, 9999	1%	9999		
	848	G238	Fall-time torque bias terminal 1 gain	0 to 400%, 9999	1%	9999		
Additional function	849	T007	Analog input offset adjustment	0 to 200%	0.1%	100%		
	850	G103	Brake operation selection	0 to 2	1	0		
	851 *9	C240	Control terminal option-Number of encoder pulses	0 to 4096	1	2048		
	852 *9	C241	Control terminal option-Encoder rotation direction	0, 1, 100, 101	1	1		
	853 *9	H417	Speed deviation time	0 to 100 s	0.1 s	1 s		
	854	G217	Excitation ratio	0 to 100%	1%	100%		
	855 *9	C248	Control terminal option-Signal loss detection enable/disable selection	0, 1	1	0		
	858	T040	Terminal 4 function assignment	0, 1, 4, 9999	1	0		
	859	C126	Torque current/Rated PM motor current	0 to 500 A, 9999 *2	0.01 A *2	9999		
				0 to 3600 A, 9999 *3	0.1 A *3			
	860	C226	Second motor torque current/Rated PM motor current	0 to 500 A, 9999 *2	0.01 A *2	9999		
				0 to 3600 A, 9999 *3	0.1 A *3			
	862 *9	C242	Encoder option selection	0, 1	1	0		
	863 *9	M600	Control terminal option-Encoder pulse division ratio	1 to 32767	1	1		
	864	M470	Torque detection	0 to 400%	0.1%	150%		
	865	M446	Low speed detection	0 to 590 Hz	0.01 Hz	1.5 Hz		
Indication function	866	M042	Torque monitoring reference	0 to 400%	0.1%	150%		
—	867	M321	AM output filter	0 to 5 s	0.01 s	0.01 s		
—	868	T010	Terminal 1 function assignment	0 to 6, 9999	1	0		
—	869	M334	Current output filter	0 to 5 s	0.01 s	-	0.02 s	
—	870	M440	Speed detection hysteresis	0 to 5 Hz	0.01 Hz	0 Hz		

Function	Pr.	Pr. group	Name	Setting range	Minimum setting increments	Initial value FM	Initial value CA	Customer setting
—	871 *9	C243	Control terminal option—Encoder position tuning setting/status	0, 1	1	0		
Protective Functions	872 *17	H201	Input phase loss protection selection	0, 1	1	0		
	873 *9	H415	Speed limit	0 to 400 Hz	0.01 Hz	20 Hz		
	874	H730	OLT level setting	0 to 400%	0.1%	150%		
	875	H030	Fault definition	0, 1	1	0		
—	876 *9	H022	Thermal protector input	0, 1	1	1		
Control system functions	877	G220	Speed feed forward control/model adaptive speed control selection	0 to 2	1	0		
	878	G221	Speed feed forward filter	0 to 1 s	0.01 s	0 s		
	879	G222	Speed feed forward torque limit	0 to 400%	0.1%	150%		
	880	C114	Load inertia ratio	0 to 200 times	0.1 times	7 times		
	881	G223	Speed feed forward gain	0 to 1000%	1%	0%		
Regeneration avoidance function	882	G120	Regeneration avoidance operation selection	0 to 2	1	0		
	883	G121	Regeneration avoidance operation level	300 to 1200 V	0.1V	DC380 V *7	DC760 V *8	
	884	G122	Regeneration avoidance at deceleration detection sensitivity	0 to 5	1	0		
	885	G123	Regeneration avoidance compensation frequency limit value	0 to 590 Hz, 9999	0.01 Hz	6 Hz		
	886	G124	Regeneration avoidance voltage gain	0 to 200%	0.1%	100%		
—	887 *9	C244	Control terminal option—Encoder magnetic pole position offset	0 to 16383, 65535	1	65535		
Free parameters	888	E420	Free parameter 1	0 to 9999	1	9999		
	889	E421	Free parameter 2	0 to 9999	1	9999		
—	890	H325	Internal storage device status indication	(0 to 511)	1	0		
Energy saving monitor	891	M023	Cumulative power monitor digit shifted times	0 to 4, 9999	1	9999		
	892	M200	Load factor	30 to 150%	0.1%	100%		
	893	M201	Energy saving monitor reference (motor capacity)	0.1 to 55 kW *2	0.01 kW *2	Applicable motor capacity		
				0 to 3600 kW *3	0.1 kW *3			
	894	M202	Control selection during commercial power-supply operation	0 to 3	1	0		
	895	M203	Power saving rate reference value	0, 1, 9999	1	9999		
	896	M204	Power unit cost	0 to 500, 9999	0.01	9999		
	897	M205	Power saving monitor average time	0 to 1000 h, 9999	1 h	9999		
	898	M206	Power saving cumulative monitor clear	0, 1, 10, 9999	1	9999		
	899	M207	Operation time rate (estimated value)	0 to 100%, 9999	0.1%	9999		

Function	Pr.	Pr. group	Name	Setting range	Minimum setting increments	Initial value FM	Initial value CA	Customer setting
Calibration parameters	C0 (900) *10	M310	FM/CA terminal calibration	-	-	-		
	C1 (901) *10	M320	AM terminal calibration	-	-	-		
	C2 (902) *10	T200	Terminal 2 frequency setting bias frequency	0 to 590 Hz	0.01 Hz	0 Hz		
	C3 (902) *10	T201	Terminal 2 frequency setting bias	0 to 300%	0.1%	0%		
	125 (903) *10	T202	Terminal 2 frequency setting gain frequency	0 to 590 Hz	0.01 Hz	60 Hz	50 Hz	
	C4 (903) *10	T203	Terminal 2 frequency setting gain	0 to 300%	0.1%	100%		
	C5 (904) *10	T400	Terminal 4 frequency setting bias frequency	0 to 590 Hz	0.01 Hz	0 Hz		
	C6 (904) *10	T401	Terminal 4 frequency setting bias	0 to 300%	0.1%	20%		
	126 (905) *10	T402	Terminal 4 frequency setting gain frequency	0 to 590 Hz	0.01 Hz	60 Hz	50 Hz	
	C7 (905) *10	T403	Terminal 4 frequency setting gain	0 to 300%	0.1%	100%		
	C12 (917) *10	T100	Terminal 1 bias frequency (speed)	0 to 590 Hz	0.01 Hz	0 Hz		
	C13 (917) *10	T101	Terminal 1 bias (speed)	0 to 300%	0.1%	0%		
	C14 (918) *10	T102	Terminal 1 gain frequency (speed)	0 to 590 Hz	0.01 Hz	60 Hz	50 Hz	
	C15 (918) *10	T103	Terminal 1 gain (speed)	0 to 300%	0.1%	100%		
	C16 (919) *10	T110	Terminal 1 bias command (torque/ magnetic flux)	0 to 400%	0.1%	0%		
	C17 (919) *10	T111	Terminal 1 bias (torque/magnetic flux)	0 to 300%	0.1%	0%		
	C18 (920) *10	T112	Terminal 1 gain command (torque/ magnetic flux)	0 to 400%	0.1%	150%		
	C19 (920) *10	T113	Terminal 1 gain (torque/magnetic flux)	0 to 300%	0.1%	100%		
	C8 (930) *10	M330	Current output bias signal	0 to 100%	0.1%	-	0%	
	C9 (930) *10	M331	Current output bias current	0 to 100%	0.1%	-	0%	
	C10 (931) *10	M332	Current output gain signal	0 to 100%	0.1%	-	100%	
	C11 (931) *10	M333	Current output gain current	0 to 100%	0.1%	-	100%	

Function	Pr.	Pr. group	Name	Setting range	Minimum setting increments	Initial value FM	Initial value CA	Customer setting
Calibration parameters	C38 (932) *10	T410	Terminal 4 bias command (torque/ magnetic flux)	0 to 400%	0.1%	0%		
	C39 (932) *10	T411	Terminal 4 bias (torque/magnetic flux)	0 to 300%	0.1%	20%		
	C40 (933) *10	T412	Terminal 4 gain command (torque/ magnetic flux)	0 to 400%	0.1%	150%		
	C41 (933) *10	T413	Terminal 4 gain (torque/magnetic flux)	0 to 300%	0.1%	100%		
	C42 (934) *10	A630	PID display bias coefficient	0 to 500, 9999	0.01	9999		
	C43 (934) *10	A631	PID display bias analog value	0 to 300%	0.1%	20%		
	C44 (935) *10	A632	PID display gain coefficient	0 to 500, 9999	0.01	9999		
	C45 (935) *10	A633	PID display gain analog value	0 to 300%	0.1%	100%		
—	977	E302	Input voltage mode selection	0, 1	1	0		
—	989	E490	Parameter copy alarm release	10 *2 100 *3	1	10 *2 100 *3		
PU	990	E104	PU buzzer control	0, 1	1	1		
	991	E105	PU contrast adjustment	0 to 63	1	58		
Monitor function	992	M104	Operation panel setting dial push monitor selection	0 to 3, 5 to 14, 17 to 20, 22 to 46, 50 to 57, 61, 62, 64, 67, 68, 71 to 75, 87 to 98, 100	1	0		
Droop control	994	G403	Droop break point gain	0.1 to 100%, 9999	0.1%	9999		
	995	G404	Droop break point torque	0.1 to 100%	0.1%	100%		
—	997	H103	Fault initiation	0 to 255, 9999	1	9999		
—	998 *21	E430	PM parameter initialization Simple	0, 3003, 3044, 3103, 3144, 8009, 8109, 9009, 9109	1	0		
—	999	E431	Automatic parameter setting Simple	1, 2, 10, 11, 12, 13, 20, 21, 9999	1	9999		
—	1000	E108	Direct setting selection	0 to 2	1	0		
—	1002 *21	C150	Lq tuning target current adjustment coefficient	50 to 150%, 9999	0.1%	9999		
Additional function	1003	G601	Notch filter frequency	0, 8 to 1250 Hz	1 Hz	0		
	1004	G602	Notch filter depth	0 to 3	1	0		
	1005	G603	Notch filter width	0 to 3	1	0		
Clock function	1006	E020	Clock (year)	2000 to 2099	1	2000		
	1007	E021	Clock (month, day)	1/1 to 12/31	1	101		
	1008	E022	Clock (hour, minute)	0:00 to 23:59	1	0		
—	1013	H323	Running speed after emergency drive retry reset	0 to 590 Hz	0.01 Hz	60 Hz	50 Hz	
—	1015	A607	Integral stop selection at limited frequency	0 to 2, 10 to 12	1	0		
—	1016	H021	PTC thermistor protection detection time	0 to 60 s	1 s	0 s		
—	1018	M045	Monitor with sign selection	0 to 2, 9999	1	9999		

Function	Pr.	Pr. group	Name	Setting range	Minimum setting increments	Initial value FM	Initial value CA	Customer setting
Trace function	1020	A900	Trace operation selection	0 to 4	1	0		
	1021	A901	Trace mode selection	0 to 2	1	0		
	1022	A902	Sampling cycle	0 to 9	1	2		
	1023	A903	Number of analog channels	1 to 8	1	4		
	1024	A904	Sampling auto start	0, 1	1	0		
	1025	A905	Trigger mode selection	0 to 4	1	0		
	1026	A906	Number of sampling before trigger	0 to 100%	1%	90%		
	1027	A910	Analog source selection (1ch)	1 to 3, 5 to 14, 17 to 20, 22 to 24, 32 to 37, 39 to 42, 46, 52 to 54, 61, 62, 64, 67, 68, 71 to 75, 87 to 98, 201 to 213, 222 to 227, 230 to 232, 235 to 238	1	201		
	1028	A911	Analog source selection (2ch)			202		
	1029	A912	Analog source selection (3ch)			203		
	1030	A913	Analog source selection (4ch)			204		
	1031	A914	Analog source selection (5ch)			205		
	1032	A915	Analog source selection (6ch)			206		
	1033	A916	Analog source selection (7ch)			207		
	1034	A917	Analog source selection (8ch)			208		
	1035	A918	Analog trigger channel	1 to 8	1	1		
	1036	A919	Analog trigger operation selection	0, 1	1	0		
	1037	A920	Analog trigger level	600 to 1400	1	1000		
	1038	A930	Digital source selection (1ch)	1 to 255	1	1		
	1039	A931	Digital source selection (2ch)			2		
	1040	A932	Digital source selection (3ch)			3		
	1041	A933	Digital source selection (4ch)			4		
	1042	A934	Digital source selection (5ch)			5		
	1043	A935	Digital source selection (6ch)			6		
	1044	A936	Digital source selection (7ch)			7		
	1045	A937	Digital source selection (8ch)			8		
	1046	A938	Digital trigger channel	1 to 8	1	1		
	1047	A939	Digital trigger operation selection	0, 1	1	0		
—	1048	E106	Display-off waiting time	0 to 60 min	1 min	0 min		
—	1049	E110	USB host reset	0, 1	1	0		
Anti-sway control	1072	A310	DC brake judgment time for anti-sway control operation	0 to 10 s	0.1 s	3 s		
	1073	A311	Anti-sway control operation selection	0, 1	1	0		
	1074	A312	Anti-sway control frequency	0.05 to 3 Hz, 9999	0.001 Hz	1 Hz		
	1075	A313	Anti-sway control depth	0 to 3	1	0		
	1076	A314	Anti-sway control width	0 to 3	1	0		
	1077	A315	Rope length	0.1 to 50 m	0.1 m	1 m		
	1078	A316	Trolley weight	1 to 50000 kg	1 kg	1 kg		
	1079	A317	Load weight	1 to 50000 kg	1 kg	1 kg		
—	1103	F040	Deceleration time at emergency stop	0 to 3600 s	0.1 s	5 s		
—	1105 *9	C143	Encoder magnetic pole position offset	0 to 16383, 65535	1	65535		
Monitor function	1106	M050	Torque monitor filter	0 to 5 s, 9999	0.01 s	9999		
	1107	M051	Running speed monitor filter	0 to 5 s, 9999	0.01 s	9999		
	1108	M052	Excitation current monitor filter	0 to 5 s, 9999	0.01 s	9999		
—	1113	H414	Speed limit method selection	0 to 2, 10, 9999	1	0		
—	1114	D403	Torque command reverse selection	0, 1	1	1		
—	1115	G218	Speed control integral term clear time	0 to 9998 ms	1 ms	0 s		

Function	Pr.	Pr. group	Name	Setting range	Minimum setting increments	Initial value FM	Initial value CA	Customer setting
–	1116	G206	Constant output range speed control P gain compensation	0 to 100%	0.1%	0%		
–	1117	G261	Speed control P gain 1 (per-unit system)	0 to 300, 9999	0.01	9999		
–	1118	G361	Speed control P gain 2 (per-unit system)	0 to 300, 9999	0.01	9999		
–	1119	G262	Model speed control gain (per-unit system)	0 to 300, 9999	0.01	9999		
–	1121	G260	Per-unit speed control reference frequency	0 to 400 Hz	0.01 Hz	120 Hz *2		
						60 Hz *3		
PID control	1134	A605	PID upper limit manipulated value	0 to 100%	0.1%	100%		
	1135	A606	PID lower limit manipulated value	0 to 100%	0.1%	100%		
	1136	A670	Second PID display bias coefficient	0 to 500, 9999	0.01	9999		
	1137	A671	Second PID display bias analog value	0 to 300%	0.1%	20%		
	1138	A672	Second PID display gain coefficient	0 to 500, 9999	0.01	9999		
	1139	A673	Second PID display gain analog value	0 to 300%	0.1%	100%		
	1140	A664	Second PID set point/deviation input selection	1 to 5	1	2		
	1141	A665	Second PID measured value input selection	1 to 5	1	3		
	1142	A640	Second PID unit selection	0 to 43, 9999	1	9999		
	1143	A641	Second PID upper limit	0 to 100%, 9999	0.1%	9999		
	1144	A642	Second PID lower limit	0 to 100%, 9999	0.1%	9999		
	1145	A643	Second PID deviation limit	0 to 100%, 9999	0.1%	9999		
	1146	A644	Second PID signal operation selection	0 to 3, 10 to 13	1	0		
	1147	A661	Second output interruption detection time	0 to 3600 s, 9999	0.1 s	1 s		
	1148	A662	Second output interruption detection level	0 to 590 Hz	0.01 Hz	0 Hz		
	1149	A663	Second output interruption cancel level	900 to 1100%	0.1%	1000%		
PLC function	1150 to 1199	A810 to A859	PLC function user parameters 1 to 50	0 to 65535	1	0		
–	1220 *25	B100	Target position/speed selection	0 to 2	1	0		

Function	Pr.	Pr. group	Name	Setting range	Minimum setting increments	Initial value		Customer setting
						FM	CA	
Simple position control	1221	B101	Start command edge detection selection	0, 1	1	0		
	1222	B120	First positioning acceleration time	0.01 to 360 s	0.01 s	5 s		
	1223	B121	First positioning deceleration time	0.01 to 360 s	0.01 s	5 s		
	1224	B122	First positioning dwell time	0 to 20000 ms	1 ms	0 ms		
	1225	B123	First positioning sub-function	0 to 2, 10 to 12, 100 to 102, 110 to 112	1	10		
	1226	B124	Second positioning acceleration time	0.01 to 360 s	0.01 s	5 s		
	1227	B125	Second positioning deceleration time	0.01 to 360 s	0.01 s	5 s		
	1228	B126	Second positioning dwell time	0 to 20000 ms	1 ms	0 ms		
	1229	B127	Second positioning sub-function	0 to 2, 10 to 12, 100 to 102, 110 to 112	1	10		
	1230	B128	Third positioning acceleration time	0.01 to 360 s	0.01 s	5 s		
	1231	B129	Third positioning deceleration time	0.01 to 360 s	0.01 s	5 s		
	1232	B130	Third positioning dwell time	0 to 20000 ms	1 ms	0 ms		
	1233	B131	Third positioning sub-function	0 to 2, 10 to 12, 100 to 102, 110 to 112	1	10		
	1234	B132	Fourth positioning acceleration time	0.01 to 360 s	0.01 s	5 s		
	1235	B133	Fourth positioning deceleration time	0.01 to 360 s	0.01 s	5 s		
	1236	B134	Fourth positioning dwell time	0 to 20000 ms	1 ms	0 ms		
	1237	B135	Fourth positioning sub-function	0 to 2, 10 to 12, 100 to 102, 110 to 112	1	10		
	1238	B136	Fifth positioning acceleration time	0.01 to 360 s	0.01 s	5 s		
	1239	B137	Fifth positioning deceleration time	0.01 to 360 s	0.01 s	5 s		
	1240	B138	Fifth positioning dwell time	0 to 20000 ms	1 ms	0 ms		
	1241	B139	Fifth positioning sub-function	0 to 2, 10 to 12, 100 to 102, 110 to 112	1	10		
	1242	B140	Sixth positioning acceleration time	0.01 to 360 s	0.01 s	5 s		
	1243	B141	Sixth positioning deceleration time	0.01 to 360 s	0.01 s	5 s		
	1244	B142	Sixth positioning dwell time	0 to 20000 ms	1 ms	0 ms		
	1245	B143	Sixth positioning sub-function	0 to 2, 10 to 12, 100 to 102, 110 to 112	1	10		
	1246	B144	Seventh positioning acceleration time	0.01 to 360 s	0.01 s	5 s		
	1247	B145	Seventh positioning deceleration time	0.01 to 360 s	0.01 s	5 s		
	1248	B146	Seventh positioning dwell time	0 to 20000 ms	1 ms	0 ms		
	1249	B147	Seventh positioning sub-function	0 to 2, 10 to 12, 100 to 102, 110 to 112	1	10		
	1250	B148	Eighth positioning acceleration time	0.01 to 360 s	0.01 s	5 s		
	1251	B149	Eighth positioning deceleration time	0.01 to 360 s	0.01 s	5 s		
	1252	B150	Eighth positioning dwell time	0 to 20000 ms	1 ms	0 ms		
	1253	B151	Eighth positioning sub-function	0 to 2, 10 to 12, 100 to 102, 110 to 112	1	10		
	1254	B152	Ninth positioning acceleration time	0.01 to 360 s	0.01 s	5 s		

Function	Pr.	Pr. group	Name	Setting range	Minimum setting increments	Initial value FM	Initial value CA	Customer setting
Simple position control	1255	B153	Ninth positioning deceleration time	0.01 to 360 s	0.01 s	5 s		
	1256	B154	Ninth positioning dwell time	0 to 20000 ms	1 ms	0 ms		
	1257	B155	Ninth positioning sub-function	0 to 2, 10 to 12, 100 to 102, 110 to 112	1	10		
	1258	B156	Tenth positioning acceleration time	0.01 to 360 s	0.01 s	5 s		
	1259	B157	Tenth positioning deceleration time	0.01 to 360 s	0.01 s	5 s		
	1260	B158	Tenth positioning dwell time	0 to 20000 ms	1 ms	0 ms		
	1261	B159	Tenth positioning sub-function	0 to 2, 10 to 12, 100 to 102, 110 to 112	1	10		
	1262	B160	Eleventh positioning acceleration time	0.01 to 360 s	0.01 s	5 s		
	1263	B161	Eleventh positioning deceleration time	0.01 to 360 s	0.01 s	5 s		
	1264	B162	Eleventh positioning dwell time	0 to 20000 ms	1 ms	0 ms		
	1265	B163	Eleventh positioning sub-function	0 to 2, 10 to 12, 100 to 102, 110 to 112	1	10		
	1266	B164	Twelfth positioning acceleration time	0.01 to 360 s	0.01 s	5 s		
	1267	B165	Twelfth positioning deceleration time	0.01 to 360 s	0.01 s	5 s		
	1268	B166	Twelfth positioning dwell time	0 to 20000 ms	1 ms	0 ms		
	1269	B167	Twelfth positioning sub-function	0 to 2, 10 to 12, 100 to 102, 110 to 112	1	10		
	1270	B168	Thirteenth positioning acceleration time	0.01 to 360 s	0.01 s	5 s		
	1271	B169	Thirteenth positioning deceleration time	0.01 to 360 s	0.01 s	5 s		
	1272	B170	Thirteenth positioning dwell time	0 to 20000 ms	1 ms	0 ms		
	1273	B171	Thirteenth positioning sub-function	0 to 2, 10 to 12, 100 to 102, 110 to 112	1	10		
	1274	B172	Fourteenth positioning acceleration time	0.01 to 360 s	0.01 s	5 s		
	1275	B173	Fourteenth positioning deceleration time	0.01 to 360 s	0.01 s	5 s		
	1276	B174	Fourteenth positioning dwell time	0 to 20000 ms	1 ms	0 ms		
	1277	B175	Fourteenth positioning sub-function	0 to 2, 10 to 12, 100 to 102, 110 to 112	1	10		
	1278	B176	Fifteenth positioning acceleration time	0.01 to 360 s	0.01 s	5 s		
	1279	B177	Fifteenth positioning deceleration time	0.01 to 360 s	0.01 s	5 s		
	1280	B178	Fifteenth positioning dwell time	0 to 20000 ms	1 ms	0 ms		
	1281	B179	Fifteenth positioning sub-function	0, 2, 10, 12, 100, 102, 110, 112	1	10		
	1282	B180	Home position return method selection	0 to 6	1	4		
	1283	B181	Home position return speed	0 to 30 Hz	0.01 Hz	2 Hz		
	1284	B182	Home position return creep speed	0 to 10 Hz	0.01 Hz	0.5 Hz		
	1285	B183	Home position shift amount lower 4 digits	0 to 9999	1	0		
	1286	B184	Home position shift amount upper 4 digits	0 to 9999	1	0		
	1287	B185	Travel distance after proximity dog ON lower 4 digits	0 to 9999	1	2048		
	1288	B186	Travel distance after proximity dog ON upper 4 digits	0 to 9999	1	0		

Function	Pr.	Pr. group	Name	Setting range	Minimum setting increments	Initial value FM	Initial value CA	Customer setting
Simple position control	1289	B187	Home position return stopper torque	0 to 200%	0.1%	40%		
	1290	B188	Home position return stopper waiting time	0 to 10 s	0.1 s	0.5 s		
	1292	B190	Position control terminal input selection	0, 1	1	0		
	1293	B191	Roll feeding mode selection	0, 1	1	0		
	1294	B192	Position detection lower 4 digits	0 to 9999	1	0		
	1295	B193	Position detection upper 4 digits	0 to 9999	1	0		
	1296	B194	Position detection selection	0 to 2	1	0		
	1297	B195	Position detection hysteresis width	0 to 32767	1	0		
—	1298	B013	Second position control gain	0 to 150 s^{-1}	1 s^{-1}	25 s^{-1}		
—	1299	G108	Second pre-excitation selection	0, 1	1	0		
—	1300 to 1343	N500 to N543	Communication option parameters. For details, refer to the Instruction Manual of the option.					
—	1348	G263	P/PI control switchover frequency	0 to 400 Hz	0.01 Hz	0 Hz		
—	1349	G264	Emergency stop operation selection	0, 1, 10, 11	1	0		
—	1350 to 1359	N550 to N559	Communication option parameters. For details, refer to the Instruction Manual of the option.					
—	1410	A170	Starting times lower 4 digits	0 to 9999	1	0		
—	1411	A171	Starting times upper 4 digits	0 to 9999	1	0		
—	1412 *21	C135	Motor induced voltage constant (phi f) exponent	0 to 2, 9999	1	9999		
—	1413 *21	C235	Second motor induced voltage constant (phi f) exponent	0 to 2, 9999	1	9999		
Load characteristics fault detection	1480 *23	H520	Load characteristics measurement mode	0, 1 (2 to 5, 81 to 85)	1	0		
	1481 *23	H521	Load characteristics load reference 1	0 to 400%, 8888, 9999	0.1%	9999		
	1482 *23	H522	Load characteristics load reference 2	0 to 400%, 8888, 9999	0.1%	9999		
	1483 *23	H523	Load characteristics load reference 3	0 to 400%, 8888, 9999	0.1%	9999		
	1484 *23	H524	Load characteristics load reference 4	0 to 400%, 8888, 9999	0.1%	9999		
	1485 *23	H525	Load characteristics load reference 5	0 to 400%, 8888, 9999	0.1%	9999		
	1486 *23	H526	Load characteristics maximum frequency	0 to 590 Hz	0.01 Hz	60 Hz	50 Hz	
	1487 *23	H527	Load characteristics minimum frequency	0 to 590 Hz	0.01 Hz	6 Hz		
	1488 *23	H531	Upper limit warning detection width	0 to 400%, 9999	0.1%	20%		
	1489 *23	H532	Lower limit warning detection width	0 to 400%, 9999	0.1%	20%		
	1490 *23	H533	Upper limit fault detection width	0 to 400%, 9999	0.1%	9999		
	1491 *23	H534	Lower limit fault detection width	0 to 400%, 9999	0.1%	9999		
	1492 *23	H535	Load status detection signal delay time / load reference measurement waiting time	0 to 60 s	0.1 s	1 s		
—	1499	E415	Parameter for manufacturer setting. Do not set.					

Function	Pr.	Pr. group	Name	Setting range	Minimum setting increments	Initial value FM	Initial value CA	Customer setting
Clear parameters	Pr.CLR		Parameter clear	(0), 1	1	0		
	ALL.CL		All parameter clear	(0), 1	1	0		
	Err.CL		Fault history clear	(0), 1	1	0		
—	Pr.CPY		Parameter copy	(0), 1 to 3	1	0		
—	Pr.CHG		Initial value change list	—	1	0		
—	IPM		IPM initialization	0, 3003, 3044	1	0		
—	AUTO		Automatic parameter setting	—	—	—		
—	Pr.MD		Group parameter setting	(0), 1, 2	1	0		

*1 Differ according to capacities.
6%: FR-A820-00077(0.75K) or lower, FR-A840-00038(0.75K) or lower
4%: FR-A820-00105(1.5K) to FR-A820-00250(3.7K), FR-A840-00052(1.5K) to FR-A840-00126(3.7K)
3%: FR-A820-00340(5.5K), FR-A820-00490(7.5K), FR-A840-00170(5.5K), FR-A840-00250(7.5K)
2%: FR-A820-00630(11K) to FR-A820-03160(55K), FR-A840-00310(11K) to FR-A840-01800(55K)
1%: FR-A820-03800(75K) or higher, FR-A840-02160(75K) or higher
*2 The setting range or initial value for the FR-A820-03160(55K) or lower and FR-A840-01800(55K) or lower.
*3 The setting range or initial value for the FR-A820-03800(75K) or higher and FR-A840-02160(75K) or higher.
*4 The initial value for the FR-A820-00490(7.5K) or lower and FR-A840-00250(7.5K) or lower.
*5 The initial value for the FR-A820-00630(11K) or higher and FR-A840-00310(11K) or higher.
*6 Differ according to capacities.
4%: FR-A820-00490(7.5K) or lower, FR-A840-00250(7.5K) or lower
2%: FR-A820-00630(11K) to FR-A820-03160(55K), FR-A840-00310(11K) to FR-A840-01800(55K)
1%: FR-A820-03800(75K) or higher, FR-A840-02160(75K) or higher
*7 The value for the 200 V class.
*8 The value for the 400 V class.
*9 The setting is available only when a vector control compatible option is installed. Refer to the Instruction Manual of each option for details.
*10 The parameter number in parentheses is the one for use with the LCD operation panel and the parameter unit.
*11 The setting range or initial value for the standard model.
*12 The setting range or initial value for the separated converter type.
*13 The setting range or initial value for the IP55 compatible model.
*14 The setting range or initial value for the slim model.
*15 The setting range or initial value for the slim model (separated converter type).
*16 The setting is available for the standard model and the slim model (including the separated converter type of the slim model).
*17 The setting is not available for the separated converter type and the slim model (separated converter type).
*18 The setting is available only for the FR-A800-GF or when a compatible plug-in option is installed.
*19 The setting range differs for the FR-A800-E. (Refer to **page 120**.)
*20 The setting is not available for the FR-A800-E.
*21 Parameter for manufacturer setting for the FR-A842-P. Do not set.
*22 The setting range differs for the FR-A842-P. (Refer to **page 120**.)
*23 The setting is not available for the FR-A842-P.
*24 The setting is available for the FR-A800-GN or FR-A800-GF, or when a compatible plug-in option is installed.
*25 The setting is available when a compatible HMS network option is installed. For details, refer to the Instruction Manual (Detailed).

List of parameters for the FR-A800-E Ethernet communication (by parameter number)

The following table shows the extended parameters for the FR-A800-E as compared to the standard inverters. Set the parameters according to the application.

Function	Pr.	Pr. group	Name	Setting range	Minimum setting increments	Initial value	Customer setting
Output terminal function assignment	190	M400	RUN terminal function selection	242, 342 *1	1	0	
	191	M401	SU terminal function selection		1	1	
	192	M402	IPF terminal function selection		1	2 *2 9999 *3	
	193	M403	OL terminal function selection		1	3	
	194	M404	FU terminal function selection		1	4	
	195	M405	ABC1 terminal function selection		1	99	
	196	M406	ABC2 terminal function selection		1	9999	
	313	M410	DO0 output selection	242, 342 *1	1	9999	
	314	M411	DO1 output selection		1	9999	
	315	M412	DO2 output selection		1	9999	
Ethernet communication	550	D012	NET mode operation command source selection	0, 1, 5, 9999	1	9999	
	551	D013	PU mode operation command source selection	1 to 3, 5, 9999	1	9999	
	1124	N681	Station number in inverter-to-inverter link	0 to 5, 9999	1	9999	
	1125	N682	Number of inverters in inverter-to-inverter link system	2 to 6	1	2	
	1424	N650	Ethernet communication network number	1 to 239	1	1	
	1425	N651	Ethernet communication station number	1 to 120	1	1	
	1426	N641	Link speed and duplex mode selection	0 to 4	1	0	
	1427	N630	Ethernet function selection 1	502, 5000 to 5002, 5006 to 5008, 5010 to 5013, 9999, 45237	1	5001	
	1428	N631	Ethernet function selection 2	502, 5000 to 5002, 5006 to 5008, 5010 to 5013, 9999, 45237	1	45237	
	1429	N632	Ethernet function selection 3	502, 5000 to 5002, 5006 to 5008, 5010 to 5013, 9999, 45237	1	9999	
	1431	N643	Ethernet signal loss detection function selection	0 to 3	1	0	
	1432	N644	Ethernet communication check time interval	0 to 999.8 s, 9999	0.1 s	9999	
	1434	N600	IP address 1 (Ethernet)	0 to 255	1	192	
	1435	N601	IP address 2 (Ethernet)	0 to 255	1	168	
	1436	N602	IP address 3 (Ethernet)	0 to 255	1	50	
	1437	N603	IP address 4 (Ethernet)	0 to 255	1	1	
	1438	N610	Subnet mask 1	0 to 255	1	255	
	1439	N611	Subnet mask 2	0 to 255	1	255	
	1440	N612	Subnet mask 3	0 to 255	1	255	
	1441	N613	Subnet mask 4	0 to 255	1	0	
	1442	N660	IP filter address 1 (Ethernet)	0 to 255	1	0	
	1443	N661	IP filter address 2 (Ethernet)	0 to 255	1	0	
	1444	N662	IP filter address 3 (Ethernet)	0 to 255	1	0	
	1445	N663	IP filter address 4 (Ethernet)	0 to 255	1	0	
	1446	N664	IP filter address 2 range specification (Ethernet)	0 to 255, 9999	1	9999	
	1447	N665	IP filter address 3 range specification (Ethernet)	0 to 255, 9999	1	9999	
	1448	N666	IP filter address 4 range specification (Ethernet)	0 to 255, 9999	1	9999	

Function	Pr.	Pr. group	Name	Setting range	Minimum setting increments	Initial value	Customer setting
Ethernet communication	1449	N670	Ethernet command source selection IP address 1	0 to 255	1	0	
	1450	N671	Ethernet command source selection IP address 2	0 to 255	1	0	
	1451	N672	Ethernet command source selection IP address 3	0 to 255	1	0	
	1452	N673	Ethernet command source selection IP address 4	0 to 255	1	0	
	1453	N674	Ethernet command source selection IP address 3 range specification	0 to 255, 9999	1	9999	
	1454	N675	Ethernet command source selection IP address 4 range specification	0 to 255, 9999	1	9999	
	1455	N642	Keepalive time	1 to 7200 s	1 s	3600 s	

*1 Setting values not mentioned above are the same as those of the standard inverters.
*2 The initial value for the standard model, IP55 compatible model, and slim model.
*3 The initial value for the separated converter type and the slim model (separated converter type).

● List of parameters for the FR-A842-P parallel operation (by parameter number)

The following table shows the extended parameters for the FR-A842-P as compared to the standard inverters. Set the parameters according to the application.

Function	Pr.	Pr. group	Name	Setting range	Minimum setting increments	Initial value	Customer setting
Output terminal function assignment	190	M400	RUN terminal function selection	227, 327 *1	1	0	
	191	M401	SU terminal function selection		1	1	
	192	M402	IPF terminal function selection		1	9999	
	193	M403	OL terminal function selection		1	3	
	194	M404	FU terminal function selection		1	4	
	195	M405	ABC1 terminal function selection		1	99	
	196	M406	ABC2 terminal function selection		1	9999	
Parallel operation function	652	N092	Parallel operation communication check time	0, 0.1 to 120 s	0.1 s	1 s	
	1001	E390	Parallel operation selection	1, 2, 100, 200, 300	1	100	

*1 Setting values not mentioned above are the same as those of the standard inverters.

List of parameters for the FR-A800-GN CC-Link IE TSN communication (by parameter number)

The following table shows the extended parameters for the FR-A800-GN as compared to the standard inverters. Set the parameters according to the application.

Function	Pr.	Pr. group	Name	Setting range	Minimum setting increments	Initial value	Customer setting
CC-Link IE TSN	434	N700	IP address 1	0 to 255	1	0(192*1)	
	435	N701	IP address 2	0 to 255	1	0(168*1)	
	436	N702	IP address 3	0 to 255	1	0(50*1)	
	437	N703	IP address 4	0 to 255	1	0(2*1)	
	438	N710	Sub-network mask 1	0 to 255	1	0(255*1)	
	439	N711	Sub-network mask 2	0 to 255	1	0(255*1)	
	440	N712	Sub-network mask 3	0 to 255	1	0(255*1)	
	441	N713	Sub-network mask 4	0 to 255	1	0	
	1442	N760	IP filter address 1 (Ethernet)	0 to 255	1	0	
	1443	N761	IP filter address 2 (Ethernet)	0 to 255	1	0	
	1444	N762	IP filter address 3 (Ethernet)	0 to 255	1	0	
	1445	N763	IP filter address 4 (Ethernet)	0 to 255	1	0	
	1446	N764	IP filter address 2 range specification (Ethernet)	0 to 255, 9999	1	9999	
	1447	N765	IP filter address 3 range specification (Ethernet)	0 to 255, 9999	1	9999	
	1448	N766	IP filter address 4 range specification (Ethernet)	0 to 255, 9999	1	9999	
	1459	N746	Clock source selection	0 to 2	1	0	

*1 The initial value after all parameters have been cleared.

List of parameters for the FR-A800-F CC-Link IE TSN safety communication function (by parameter number)

The following table shows the extended parameters for the FR-A800-F with the FR-A8NCG-S installed, as compared to the standard inverters. Set the parameters according to the application.

Function	Pr.	Pr. group	Name	Setting range	Minimum setting increments	Initial value	Customer setting
CC-Link IE TSN	434	N700	IP address 1	0 to 255	1	0(192*1)	
	435	N701	IP address 2	0 to 255	1	0(168*1)	
	436	N702	IP address 3	0 to 255	1	0(50*1)	
	437	N703	IP address 4	0 to 255	1	0(2*1)	
	438	N710	Sub-network mask 1	0 to 255	1	0(255*1)	
	439	N711	Sub-network mask 2	0 to 255	1	0(255*1)	
	440	N712	Sub-network mask 3	0 to 255	1	0(255*1)	
	441	N713	Sub-network mask 4	0 to 255	1	0	
	986	H110	Display safety fault code	(0 to 127)	1	0	
	1130	N741	Link speed selection	0, 1	1	0	
	1442	N760	IP filter address 1 (Ethernet)	0 to 255	1	0	
	1443	N761	IP filter address 2 (Ethernet)	0 to 255	1	0	
	1444	N762	IP filter address 3 (Ethernet)	0 to 255	1	0	
	1445	N763	IP filter address 4 (Ethernet)	0 to 255	1	0	
	1446	N764	IP filter address 2 range specification (Ethernet)	0 to 255, 9999	1	9999	
	1447	N765	IP filter address 3 range specification (Ethernet)	0 to 255, 9999	1	9999	
	1448	N766	IP filter address 4 range specification (Ethernet)	0 to 255, 9999	1	9999	
	1459	N746	Clock source selection	0 to 2	1	0	

*1 The initial value after all parameters have been cleared.

Inverter parameter list (by function group)

◆ E: Environment setting parameters

Parameters that set the inverter operation characteristics.

Pr. group	Pr.	Name
E000	168	Parameter for manufacturer setting. Do not set.
E001	169	Parameter for manufacturer setting. Do not set.
E020	1006	Clock (year)
E021	1007	Clock (month, day)
E022	1008	Clock (hour, minute)
E023	269	Parameter for manufacturer setting. Do not set.
E080	168	Parameter for manufacturer setting. Do not set.
E081	169	Parameter for manufacturer setting. Do not set.
E100	75	Reset selection
E101	75	Disconnected PU detection
E102	75	PU stop selection
E103	145	PU display language selection
E104	990	PU buzzer control
E105	991	PU contrast adjustment
E106	1048	Display-off waiting time
E107	75	Reset limit
E108	1000	Direct setting selection
E110	1049	USB host reset
E200	161	Frequency setting/key lock operation selection
E201	295	Frequency change increment amount setting
E300	30	Regenerative function selection
E301	570	Multiple rating setting
E302	977	Input voltage mode selection
E400	77	Parameter write selection
E410	296	Password lock level
E411	297	Password lock/unlock
E415	1499	Parameter for manufacturer setting. Do not set.
E420	888	Free parameter 1
E421	889	Free parameter 2
E430	998 *7	PM parameter initialization Simple
E431	999	Automatic parameter setting Simple
E440	160	User group read selection Simple
E441	172	User group registered display/batch clear
E442	173	User group registration
E443	174	User group clear
E490	989	Parameter copy alarm release
E600	72 *7	PWM frequency selection
E601	240	Soft-PWM operation selection
E602	260 *7	PWM frequency automatic switchover
E700	255	Life alarm status display
E701	256 *4	Inrush current limit circuit life display
E702	257	Control circuit capacitor life display
E703	258 *4	Main circuit capacitor life display
E704	259 *4	Main circuit capacitor life measuring
E705	506	Display estimated main circuit capacitor residual life
E706	507	Display/reset ABC1 relay contact life
E707	508	Display/reset ABC2 relay contact life
E710	503	Maintenance timer 1
E711	504	Maintenance timer 1 warning output set time
E712	686	Maintenance timer 2
E713	687	Maintenance timer 2 warning output set time
E714	688	Maintenance timer 3
E715	689	Maintenance timer 3 warning output set time
E720	555	Current average time
E721	556	Data output mask time
E722	557	Current average value monitor signal output reference current

◆ F: Setting of acceleration/deceleration time and acceleration/deceleration pattern

Parameters that set the motor acceleration/deceleration characteristics.

Pr. group	Pr.	Name
F000	20	Acceleration/deceleration reference frequency
F001	21	Acceleration/deceleration time increments
F002	16	Jog acceleration/deceleration time
F003	611	Acceleration time at a restart
F010	7	Acceleration time Simple
F011	8	Deceleration time Simple
F020	44	Second acceleration/deceleration time
F021	45	Second deceleration time
F022	147	Acceleration/deceleration time switching frequency
F030	110	Third acceleration/deceleration time
F031	111	Third deceleration time
F040	1103	Deceleration time at emergency stop
F070	791 *7	Acceleration time in low-speed range
F071	792 *7	Deceleration time in low-speed range
F100	29	Acceleration/deceleration pattern selection
F101	59	Remote function selection
F102	13	Starting frequency
F103	571	Holding time at a start
F200	140	Backlash acceleration stopping frequency
F201	141	Backlash acceleration stopping time
F202	142	Backlash deceleration stopping frequency
F203	143	Backlash deceleration stopping time
F300	380	Acceleration S-pattern 1
F301	381	Deceleration S-pattern 1
F302	382	Acceleration S-pattern 2
F303	383	Deceleration S-pattern 2
F400	516	S-pattern time at a start of acceleration
F401	517	S-pattern time at a completion of acceleration
F402	518	S-pattern time at a start of deceleration
F403	519	S-pattern time at a completion of deceleration
F500	292	Automatic acceleration/deceleration
F510	61	Reference current
F511	62	Reference value at acceleration
F512	63	Reference value at deceleration
F513	293	Acceleration/deceleration separate selection
F520	64	Starting frequency for elevator mode

◆ D: Operation command and frequency command

Parameters that specify the inverter's command source, and parameters that set the motor driving frequency and torque.

Pr. group	Pr.	Name
D000	79	Operation mode selection Simple
D001	340	Communication startup mode selection
D010	338	Communication operation command source
D011	339	Communication speed command source
D012	550 *7	NET mode operation command source selection
D013	551	PU mode operation command source selection
D020	78	Reverse rotation prevention selection
D030	811	Set resolution switchover

Pr. group	Pr.	Name
D100	291	Pulse train I/O selection
D101	384	Input pulse division scaling factor
D110	385	Frequency for zero input pulse
D111	386	Frequency for maximum input pulse
D120	432 *1	Pulse train torque command bias
D121	433 *1	Pulse train torque command gain
D200	15	Jog frequency
D300	28	Multi-speed input compensation selection
D301	4	Multi-speed setting (high speed) Simple
D302	5	Multi-speed setting (middle speed) Simple
D303	6	Multi-speed setting (low speed) Simple
D304 to D307	24 to 27	Multi-speed setting (4 speed to 7 speed)
D308 to D315	232 to 239	Multi-speed setting (8 speed to 15 speed)
D400	804	Torque command source selection
D401	805	Torque command value (RAM)
D402	806	Torque command value (RAM, EEPROM)
D403	1114	Torque command reverse selection

◆ H: Protective function parameter

Parameters to protect the motor and the inverter.

Pr. group	Pr.	Name
H000	9	Electronic thermal O/L relay Simple
H001	600	First free thermal reduction frequency 1
H002	601	First free thermal reduction ratio 1
H003	602	First free thermal reduction frequency 2
H004	603	First free thermal reduction ratio 2
H005	604	First free thermal reduction frequency 3
H006	607	Motor permissible load level
H010	51	Second electronic thermal O/L relay
H011	692	Second free thermal reduction frequency 1
H012	693	Second free thermal reduction ratio 1
H013	694	Second free thermal reduction frequency 2
H014	695	Second free thermal reduction ratio 2
H015	696	Second free thermal reduction frequency 3
H016	608	Second motor permissible load level
H020	561	PTC thermistor protection level
H021	1016	PTC thermistor protection detection time
H022	876 *1	Thermal protector input
H030	875	Fault definition
H100	244	Cooling fan operation selection
H101	249	Earth (ground) fault detection at start
H102	598	Undervoltage level
H103	997	Fault initiation
H106	244	Cooling fan operation selection during the test operation
H194	521	Output short-circuit detection
H200	251	Output phase loss protection selection
H201	872 *4	Input phase loss protection selection
H300	65 *7	Retry selection
H301	67 *7	Number of retries at fault occurrence
H302	68 *7	Retry waiting time
H303	69 *7	Retry count display erase
H320	523	Emergency drive mode selection
H321	524	Emergency drive running speed
H322	515	Emergency drive dedicated retry count
H323	1013	Running speed after emergency drive retry reset
H324	514	Emergency drive dedicated retry waiting time
H325	890	Internal storage device status indication
H400	1	Maximum frequency Simple
H401	2	Minimum frequency Simple
H402	18	High speed maximum frequency
H410	807	Speed limit selection
H411	808	Forward rotation speed limit/speed limit
H412	809	Reverse rotation speed limit/reverse-side speed limit
H414	1113	Speed limit method selection
H415	873 *1	Speed limit
H416	285	Speed deviation excess detection frequency
H417	853 *1	Speed deviation time
H420	31	Frequency jump 1A
H421	32	Frequency jump 1B
H422	33	Frequency jump 2A
H423	34	Frequency jump 2B
H424	35	Frequency jump 3A
H425	36	Frequency jump 3B
H429	552	Frequency jump range
H500	22	Stall prevention operation level (Torque limit level)
H501	156	Stall prevention operation selection
H520	1480 *8	Load characteristics measurement mode
H521	1481 *8	Load characteristics load reference 1
H522	1482 *8	Load characteristics load reference 2
H523	1483 *8	Load characteristics load reference 3
H524	1484 *8	Load characteristics load reference 4
H525	1485 *8	Load characteristics load reference 5
H526	1486 *8	Load characteristics maximum frequency
H527	1487 *8	Load characteristics minimum frequency
H531	1488 *8	Upper limit warning detection width
H532	1489 *8	Lower limit warning detection width
H533	1490 *8	Upper limit fault detection width
H534	1491 *8	Lower limit fault detection width
H535	1492 *8	Load status detection signal delay time / load reference measurement waiting time
H600	48	Second stall prevention operation level
H601	49	Second stall prevention operation frequency
H602	114	Third stall prevention operation level
H603	115	Third stall prevention operation frequency
H610	23	Stall prevention operation level compensation factor at double speed
H611	66	Stall prevention operation reduction starting frequency
H620	148	Stall prevention level at 0 V input
H621	149	Stall prevention level at 10 V input
H631	154	Voltage reduction selection during stall prevention operation
H700	810	Torque limit input method selection
H701	812	Torque limit level (regeneration)
H702	813	Torque limit level (3rd quadrant)
H703	814	Torque limit level (4th quadrant)
H704	801	Output limit level
H710	815	Torque limit level 2
H720	816	Torque limit level during acceleration
H721	817	Torque limit level during deceleration
H730	874	OLT level setting
H800	374	Overspeed detection level
H881	690	Deceleration check time

◆ M: Monitor display and monitor output signal

Parameters regarding the inverter's operating status. These parameters are used to set the monitors and output signals.

Pr. group	Pr.	Name
M000	37	Speed display
M001	505	Speed setting reference
M002	144	Speed setting switchover
M020	170	Watt-hour meter clear
M021	563	Energization time carrying-over times
M022	268	Monitor decimal digits selection
M023	891	Cumulative power monitor digit shifted times
M030	171	Operation hour meter clear
M031	564	Operating time carrying-over times
M040	55	Frequency monitoring reference
M041	56	Current monitoring reference
M042	866	Torque monitoring reference
M043	241	Analog input display unit switchover
M044	290	Monitor negative output selection
M045	1018	Monitor with sign selection
M050	1106	Torque monitor filter
M051	1107	Running speed monitor filter
M052	1108	Excitation current monitor filter
M060	663	Control circuit temperature signal output level
M100	52	Operation panel main monitor selection
M101	774	Operation panel monitor selection 1
M102	775	Operation panel monitor selection 2
M103	776	Operation panel monitor selection 3
M104	992	Operation panel setting dial push monitor selection
M200	892	Load factor
M201	893	Energy saving monitor reference (motor capacity)
M202	894	Control selection during commercial power-supply operation
M203	895	Power saving rate reference value
M204	896	Power unit cost
M205	897	Power saving monitor average time
M206	898	Power saving cumulative monitor clear
M207	899	Operation time rate (estimated value)
M300	54	FM/CA terminal function selection
M301	158	AM terminal function selection
M310	C0 (900) *2	FM/CA terminal calibration
M320	C1 (901) *2	AM terminal calibration
M321	867	AM output filter
M330	C8 (930) *2	Current output bias signal
M331	C9 (930) *2	Current output bias current
M332	C10 (931) *2	Current output gain signal
M333	C11 (931) *2	Current output gain current
M334	869	Current output filter
M400	190	RUN terminal function selection
M401	191	SU terminal function selection
M402	192	IPF terminal function selection
M403	193	OL terminal function selection
M404	194	FU terminal function selection
M405	195	ABC1 terminal function selection
M406	196	ABC2 terminal function selection

Pr. group	Pr.	Name
M410	313 *9	DO0 output selection
M411	314 *9	DO1 output selection
M412	315 *9	DO2 output selection
M430	157	OL signal output timer
M431	289	Inverter output terminal filter
M433	166	Output current detection signal retention time
M440	870	Speed detection hysteresis
M441	41	Up-to-frequency sensitivity
M442	42	Output frequency detection
M443	43	Output frequency detection for reverse rotation
M444	50	Second output frequency detection
M445	116	Third output frequency detection
M446	865	Low speed detection
M460	150	Output current detection level
M461	151	Output current detection signal delay time
M462	152	Zero current detection level
M463	153	Zero current detection time
M464	167	Output current detection operation selection
M470	864	Torque detection
M500	495	Remote output selection
M501	496	Remote output data 1
M502	497	Remote output data 2
M510	76	Fault code output selection
M520	799	Pulse increment setting for output power
M530	655	Analog remote output selection
M531	656	Analog remote output 1
M532	657	Analog remote output 2
M533	658	Analog remote output 3
M534	659	Analog remote output 4
M600	863 *1	Control terminal option-Encoder pulse division ratio
M601	413 *1	Encoder pulse division ratio
M610	635 *1	Cumulative pulse clear signal selection
M611	636 *1	Cumulative pulse division scaling factor
M612	637 *1	Control terminal option-Cumulative pulse division scaling factor
M613	638 *1	Cumulative pulse storage

◆ T: Multi-function input terminal parameters

Parameters for the input terminals where inverter commands are received through.

Pr. group	Pr.	Name
T000	73	Analog input selection
T001	267	Terminal 4 input selection
T002	74	Input filter time constant
T003	822	Speed setting filter 1
T004	826	Torque setting filter 1
T005	832	Speed setting filter 2
T006	836	Torque setting filter 2
T007	849	Analog input offset adjustment
T010	868	Terminal 1 function assignment
T021	242	Terminal 1 added compensation amount (terminal 2)
T022	125	Terminal 2 frequency setting gain frequency Simple
T040	858	Terminal 4 function assignment
T041	243	Terminal 1 added compensation amount (terminal 4)
T042	126	Terminal 4 frequency setting gain frequency Simple
T050	252	Override bias
T051	253	Override gain

Pr. group	Pr.	Name
T052	573	4 mA input check selection
T053	777	4 mA input check operation frequency
T054	778	4 mA input check filter
T100	C12 (917) *2	Terminal 1 bias frequency (speed)
T101	C13 (917) *2	Terminal 1 bias (speed)
T102	C14 (918) *2	Terminal 1 gain frequency (speed)
T103	C15 (918) *2	Terminal 1 gain (speed)
T110	C16 (919) *2	Terminal 1 bias command (torque/magnetic flux)
T111	C17 (919) *2	Terminal 1 bias (torque/magnetic flux)
T112	C18 (920) *2	Terminal 1 gain command (torque/magnetic flux)
T113	C19 (920) *2	Terminal 1 gain (torque/magnetic flux)
T200	C2 (902) *2	Terminal 2 frequency setting bias frequency
T201	C3 (902) *2	Terminal 2 frequency setting bias
T202	125 (903) *2	Terminal 2 frequency setting gain frequency
T203	C4 (903) *2	Terminal 2 frequency setting gain
T400	C5 (904) *2	Terminal 4 frequency setting bias frequency
T401	C6 (904) *2	Terminal 4 frequency setting bias
T402	126 (905) *2	Terminal 4 frequency setting gain frequency
T403	C7 (905) *2	Terminal 4 frequency setting gain
T410	C38 (932) *2	Terminal 4 bias command (torque/magnetic flux)
T411	C39 (932) *2	Terminal 4 bias (torque/magnetic flux)
T412	C40 (933) *2	Terminal 4 gain command (torque/magnetic flux)
T413	C41 (933) *2	Terminal 4 gain (torque/magnetic flux)
T700	178	STF terminal function selection
T701	179	STR terminal function selection
T702	180	RL terminal function selection
T703	181	RM terminal function selection
T704	182	RH terminal function selection
T705	183	RT terminal function selection
T706	184	AU terminal function selection
T707	185	JOG terminal function selection
T708	186	CS terminal function selection
T709	187	MRS terminal function selection
T710	188	STOP terminal function selection
T711	189	RES terminal function selection
T720	17	MRS input selection
T721	599	X10 terminal input selection
T722	606	Power failure stop external signal input selection
T730	155	RT signal function validity condition selection
T740	699	Input terminal filter

◆ C: Motor constant parameters

Parameters for the applied motor setting.

Pr. group	Pr.	Name
C000	684	Tuning data unit switchover
C100	71	Applied motor
C101	80	Motor capacity
C102	81	Number of motor poles
C103	9	Rated motor current Simple
C104	83	Rated motor voltage
C105	84	Rated motor frequency
C106	702 *7	Maximum motor frequency
C107	707	Motor inertia (integer)
C108	724	Motor inertia (exponent)
C110	96	Auto tuning setting/status
C111	95	Online auto tuning selection
C112	818	Easy gain tuning response level setting
C113	819	Easy gain tuning selection
C114	880	Load inertia ratio
C120	90	Motor constant (R1)
C121	91	Motor constant (R2)
C122	92	Motor constant (L1)/d-axis inductance (Ld)
C123	93	Motor constant (L2)/q-axis inductance (Lq)
C124	94	Motor constant (X)
C125	82	Motor excitation current
C126	859	Torque current/Rated PM motor current
C130	706 *7	Induced voltage constant (phi f)
C131	711 *7	Motor Ld decay ratio
C132	712 *7	Motor Lq decay ratio
C133	725 *7	Motor protection current level
C135	1412 *7	Motor induced voltage constant (phi f) exponent
C140	369 *1	Number of encoder pulses
C141	359 *1	Encoder rotation direction
C142	373 *1	Encoder position tuning setting/status
C143	1105 *1	Encoder magnetic pole position offset
C148	376 *1	Encoder signal loss detection enable/disable selection
C150	1002 *7	Lq tuning target current adjustment coefficient
C161	221	Excitation current compensation point 1
C162	222	Inductance compensation rate 1
C163	223	Excitation current compensation point 2
C164	224	Inductance compensation rate 2
C165	225	Excitation current compensation point 3
C166	226	Inductance compensation rate 3
C167	227	Excitation current compensation point 4
C168	228	Inductance compensation rate 4
C182	717 *7	Starting resistance tuning compensation
C185	721 *7	Starting magnetic pole position detection pulse width
C200	450	Second applied motor
C201	453	Second motor capacity
C202	454	Number of second motor poles
C203	51	Rated second motor current
C204	456	Rated second motor voltage
C205	457	Rated second motor frequency
C206	743 *7	Second motor maximum frequency
C207	744	Second motor inertia (integer)
C208	745	Second motor inertia (exponent)
C210	463	Second motor auto tuning setting/status
C211	574	Second motor online auto tuning
C220	458	Second motor constant (R1)
C221	459	Second motor constant (R2)

Pr. group	Pr.	Name
C222	460	Second motor constant (L1) / d-axis inductance (Ld)
C223	461	Second motor constant (L2) / q-axis inductance (Lq)
C224	462	Second motor constant (X)
C225	455	Second motor excitation current
C226	860	Second motor torque current/Rated PM motor current
C230	738 *7	Second motor induced voltage constant (phi f)
C231	739 *7	Second motor Ld decay ratio
C232	740 *7	Second motor Lq decay ratio
C233	746 *7	Second motor protection current level
C235	1413 *7	Second motor induced voltage constant (phi f) exponent
C240	851 *1	Control terminal option-Number of encoder pulses
C241	852 *1	Control terminal option-Encoder rotation direction
C242	862 *1	Encoder option selection
C243	871 *1	Control terminal option—Encoder position tuning setting/status
C244	887 *1	Control terminal option—Encoder magnetic pole position offset
C248	855 *1	Control terminal option-Signal loss detection enable/disable selection
C282	741 *7	Second starting resistance tuning compensation
C285	742 *7	Second motor magnetic pole detection pulse width

◆ A: Application parameters

Parameters to set a specific application.

Pr. group	Pr.	Name
A000	135	Electronic bypass sequence selection
A001	136	MC switchover interlock time
A002	137	Start waiting time
A003	138	Bypass selection at a fault
A004	139	Automatic switchover frequency from inverter to bypass operation
A005	159	Automatic switchover frequency range from bypass to inverter operation
A006	248	Self power management selection
A007	254	Main circuit power OFF waiting time
A100	278	Brake opening frequency
A101	279	Brake opening current
A102	280	Brake opening current detection time
A103	281	Brake operation time at start
A104	282	Brake operation frequency
A105	283	Brake operation time at stop
A106	284	Deceleration detection function selection
A107	285	Overspeed detection frequency
A108	639	Brake opening current selection
A109	640	Brake operation frequency selection
A110	292	Automatic acceleration/deceleration
A120	642	Second brake opening frequency
A121	643	Second brake opening current
A122	644	Second brake opening current detection time
A123	645	Second brake operation time at start
A124	646	Second brake operation frequency
A125	647	Second brake operation time at stop
A126	648	Second deceleration detection function selection
A128	650	Second brake opening current selection
A129	651	Second brake operation frequency selection
A130	641	Second brake sequence operation selection
A170	1410	Starting times lower 4 digits
A171	1411	Starting times upper 4 digits
A200	270	Stop-on contact/load torque high-speed frequency control selection
A201	271	High-speed setting maximum current
A202	272	Middle-speed setting minimum current
A203	273	Current averaging range
A204	274	Current averaging filter time constant
A205	275	Stop-on contact excitation current low-speed multiplying factor
A206	276 *7	PWM carrier frequency at stop-on contact
A300	592	Traverse function selection
A301	593	Maximum amplitude amount
A302	594	Amplitude compensation amount during deceleration
A303	595	Amplitude compensation amount during acceleration
A304	596	Amplitude acceleration time
A305	597	Amplitude deceleration time
A310	1072	DC brake judgment time for anti-sway control operation
A311	1073	Anti-sway control operation selection
A312	1074	Anti-sway control frequency
A313	1075	Anti-sway control depth
A314	1076	Anti-sway control width
A315	1077	Rope length
A316	1078	Trolley weight
A317	1079	Load weight
A510	350 *1	Stop position command selection
A511	360 *1	16-bit data selection
A512	361 *1	Position shift
A520	362 *1	Orientation position loop gain
A521	363 *1	Completion signal output delay time
A522	364 *1	Encoder stop check time
A523	365 *1	Orientation limit
A524	366 *1	Recheck time
A525	393 *1	Orientation selection
A526	351 *1	Orientation speed
A527	352 *1	Creep speed
A528	353 *1	Creep switchover position
A529	354 *1	Position loop switchover position
A530	355 *1	DC injection brake start position
A531	356 *1	Internal stop position command
A532	357 *1	Orientation in-position zone
A533	358 *1	Servo torque selection
A540	394 *1	Number of machine side gear teeth
A541	395 *1	Number of motor side gear teeth
A542	396 *1	Orientation speed gain (P term)
A543	397 *1	Orientation speed integral time
A544	398 *1	Orientation speed gain (D term)
A545	399 *1	Orientation deceleration ratio
A546	829 *1	Number of machine end encoder pulses
A600	759	PID unit selection
A601	131	PID upper limit
A602	132	PID lower limit
A603	553	PID deviation limit
A604	554	PID signal operation selection
A605	1134	PID upper limit manipulated value
A606	1135	PID lower limit manipulated value
A607	1015	Integral stop selection at limited frequency
A610	128	PID action selection
A611	133	PID action set point
A612	127	PID control automatic switchover frequency
A613	129	PID proportional band

Pr. group	Pr.	Name
A614	130	PID integral time
A615	134	PID differential time
A616	760	Pre-charge fault selection
A617	761	Pre-charge ending level
A618	762	Pre-charge ending time
A619	763	Pre-charge upper detection level
A620	764	Pre-charge time limit
A621	575	Output interruption detection time
A622	576	Output interruption detection level
A623	577	Output interruption cancel level
A624	609	PID set point/deviation input selection
A625	610	PID measured value input selection
A630	C42 (934) *2	PID display bias coefficient
A631	C43 (934) *2	PID display bias analog value
A632	C44 (935) *2	PID display gain coefficient
A633	C45 (935) *2	PID display gain analog value
A640	1142	Second PID unit selection
A641	1143	Second PID upper limit
A642	1144	Second PID lower limit
A643	1145	Second PID deviation limit
A644	1146	Second PID signal operation selection
A650	753	Second PID action selection
A651	755	Second PID action set point
A652	754	Second PID control automatic switchover frequency
A653	756	Second PID proportional band
A654	757	Second PID integral time
A655	758	Second PID differential time
A656	765	Second pre-charge fault selection
A657	766	Second pre-charge ending level
A658	767	Second pre-charge ending time
A659	768	Second pre-charge upper detection level
A660	769	Second pre-charge time limit
A661	1147	Second output interruption detection time
A662	1148	Second output interruption detection level
A663	1149	Second output interruption cancel level
A664	1140	Second PID set point/deviation input selection
A665	1141	Second PID measured value input selection
A670	1136	Second PID display bias coefficient
A671	1137	Second PID display bias analog value
A672	1138	Second PID display gain coefficient
A673	1139	Second PID display gain analog value
A680	573	4 mA input check selection
A681	777	4 mA input check operation frequency
A682	778	4 mA input check filter
A700	162	Automatic restart after instantaneous power failure selection
A701	299	Rotation direction detection selection at restarting
A702	57	Restart coasting time
A703	58	Restart cushion time
A704	163	First cushion time for restart
A705	164	First cushion voltage for restart
A710	165	Stall prevention operation level for restart
A711	298	Frequency search gain
A712	560	Second frequency search gain
A730	261	Power failure stop selection
A731	262	Subtracted frequency at deceleration start

Pr. group	Pr.	Name
A732	263	Subtraction starting frequency
A733	264	Power-failure deceleration time 1
A734	265	Power-failure deceleration time 2
A735	266	Power failure deceleration time switchover frequency
A785	294	UV avoidance voltage gain
A786	668	Power failure stop frequency gain
A800	414	PLC function operation selection
A801	415	Inverter operation lock mode setting
A802	416	Pre-scale function selection
A803	417	Pre-scale setting value
A804	498	PLC function flash memory clear
A805	675	User parameter auto storage function selection
A810 to A859	1150 to 1199	PLC function user parameters 1 to 50
A900	1020	Trace operation selection
A901	1021	Trace mode selection
A902	1022	Sampling cycle
A903	1023	Number of analog channels
A904	1024	Sampling auto start
A905	1025	Trigger mode selection
A906	1026	Number of sampling before trigger
A910	1027	Analog source selection (1ch)
A911	1028	Analog source selection (2ch)
A912	1029	Analog source selection (3ch)
A913	1030	Analog source selection (4ch)
A914	1031	Analog source selection (5ch)
A915	1032	Analog source selection (6ch)
A916	1033	Analog source selection (7ch)
A917	1034	Analog source selection (8ch)
A918	1035	Analog trigger channel
A919	1036	Analog trigger operation selection
A920	1037	Analog trigger level
A930	1038	Digital source selection (1ch)
A931	1039	Digital source selection (2ch)
A932	1040	Digital source selection (3ch)
A933	1041	Digital source selection (4ch)
A934	1042	Digital source selection (5ch)
A935	1043	Digital source selection (6ch)
A936	1044	Digital source selection (7ch)
A937	1045	Digital source selection (8ch)
A938	1046	Digital trigger channel
A939	1047	Digital trigger operation selection

◆ B: Position control parameters

Parameters for the position control setting.

Pr. group	Pr.	Name
B000	419	Position command source selection
B001	420	Command pulse scaling factor numerator (electronic gear numerator)
B002	421	Command pulse multiplication denominator (electronic gear denominator)
B003	422	Position control gain
B004	423	Position feed forward gain
B005	424	Position command acceleration/deceleration time constant
B006	425	Position feed forward command filter
B007	426	In-position width
B008	427	Excessive level error
B009	428	Command pulse selection
B010	429	Clear signal selection

Pr. group	Pr.	Name
B011	430	Pulse monitor selection
B012	446	Model position control gain
B013	1298	Second position control gain
B020	464	Digital position control sudden stop deceleration time
B021	465	First target position lower 4 digits
B022	466	First target position upper 4 digits
B023	467	Second target position lower 4 digits
B024	468	Second target position upper 4 digits
B025	469	Third target position lower 4 digits
B026	470	Third target position upper 4 digits
B027	471	Fourth target position lower 4 digits
B028	472	Fourth target position upper 4 digits
B029	473	Fifth target position lower 4 digits
B030	474	Fifth target position upper 4 digits
B031	475	Sixth target position lower 4 digits
B032	476	Sixth target position upper 4 digits
B033	477	Seventh target position lower 4 digits
B034	478	Seventh target position upper 4 digits
B035	479	Eighth target position lower 4 digits
B036	480	Eighth target position upper 4 digits
B037	481	Ninth target position lower 4 digits
B038	482	Ninth target position upper 4 digits
B039	483	Tenth target position lower 4 digits
B040	484	Tenth target position upper 4 digits
B041	485	Eleventh target position lower 4 digits
B042	486	Eleventh target position upper 4 digits
B043	487	Twelfth target position lower 4 digits
B044	488	Twelfth target position upper 4 digits
B045	489	Thirteenth target position lower 4 digits
B046	490	Thirteenth target position upper 4 digits
B047	491	Fourteenth target position lower 4 digits
B048	492	Fourteenth target position upper 4 digits
B049	493	Fifteenth target position lower 4 digits
B050	494	Fifteenth target position upper 4 digits
B100	1220	Parameter for manufacturer setting.
B101	1221	Start command edge detection selection
B120	1222	First positioning acceleration time
B121	1223	First positioning deceleration time
B122	1224	First positioning dwell time
B123	1225	First positioning sub-function
B124	1226	Second positioning acceleration time
B125	1227	Second positioning deceleration time
B126	1228	Second positioning dwell time
B127	1229	Second positioning sub-function
B128	1230	Third positioning acceleration time
B129	1231	Third positioning deceleration time
B130	1232	Third positioning dwell time
B131	1233	Third positioning sub-function
B132	1234	Fourth positioning acceleration time
B133	1235	Fourth positioning deceleration time
B134	1236	Fourth positioning dwell time
B135	1237	Fourth positioning sub-function
B136	1238	Fifth positioning acceleration time
B137	1239	Fifth positioning deceleration time
B138	1240	Fifth positioning dwell time
B139	1241	Fifth positioning sub-function
B140	1242	Sixth positioning acceleration time
B141	1243	Sixth positioning deceleration time
B142	1244	Sixth positioning dwell time
B143	1245	Sixth positioning sub-function

Pr. group	Pr.	Name
B144	1246	Seventh positioning acceleration time
B145	1247	Seventh positioning deceleration time
B146	1248	Seventh positioning dwell time
B147	1249	Seventh positioning sub-function
B148	1250	Eighth positioning acceleration time
B149	1251	Eighth positioning deceleration time
B150	1252	Eighth positioning dwell time
B151	1253	Eighth positioning sub-function
B152	1254	Ninth positioning acceleration time
B153	1255	Ninth positioning deceleration time
B154	1256	Ninth positioning dwell time
B155	1257	Ninth positioning sub-function
B156	1258	Tenth positioning acceleration time
B157	1259	Tenth positioning deceleration time
B158	1260	Tenth positioning dwell time
B159	1261	Tenth positioning sub-function
B160	1262	Eleventh positioning acceleration time
B161	1263	Eleventh positioning deceleration time
B162	1264	Eleventh positioning dwell time
B163	1265	Eleventh positioning sub-function
B164	1266	Twelfth positioning acceleration time
B165	1267	Twelfth positioning deceleration time
B166	1268	Twelfth positioning dwell time
B167	1269	Twelfth positioning sub-function
B168	1270	Thirteenth positioning acceleration time
B169	1271	Thirteenth positioning deceleration time
B170	1272	Thirteenth positioning dwell time
B171	1273	Thirteenth positioning sub-function
B172	1274	Fourteenth positioning acceleration time
B173	1275	Fourteenth positioning deceleration time
B174	1276	Fourteenth positioning dwell time
B175	1277	Fourteenth positioning sub-function
B176	1278	Fifteenth positioning acceleration time
B177	1279	Fifteenth positioning deceleration time
B178	1280	Fifteenth positioning dwell time
B179	1281	Fifteenth positioning sub-function
B180	1282	Home position return method selection
B181	1283	Home position return speed
B182	1284	Home position return creep speed
B183	1285	Home position shift amount lower 4 digits
B184	1286	Home position shift amount upper 4 digits
B185	1287	Travel distance after proximity dog ON lower 4 digits
B186	1288	Travel distance after proximity dog ON upper 4 digits
B187	1289	Home position return stopper torque
B188	1290	Home position return stopper waiting time
B190	1292	Position control terminal input selection
B191	1293	Roll feeding mode selection
B192	1294	Position detection lower 4 digits
B193	1295	Position detection upper 4 digits
B194	1296	Position detection selection
B195	1297	Position detection hysteresis width

◆ N: Operation via communication and its settings

Parameters for communication operation. These parameters set the communication specifications and operation.

Pr. group	Pr.	Name
N000	549 *6*7	Protocol selection
N001	342	Communication EEPROM write selection
N002	539 *6*7	MODBUS RTU communication check time interval
N010	349 *9	Communication reset selection/Ready bit status selection
N011	500 *9	Communication error execution waiting time
N012	501 *9	Communication error occurrence count display
N013	502	Stop mode selection at communication error
N014	779	Operation frequency during communication error
N020	117	PU communication station number
N021	118	PU communication speed
N022	119	PU communication data length
N023	119	PU communication stop bit length
N024	120	PU communication parity check
N025	121	PU communication retry count
N026	122	PU communication check time interval
N027	123	PU communication waiting time setting
N028	124	PU communication CR/LF selection
N030	331 *6*7	RS-485 communication station number
N031	332 *6*7	RS-485 communication speed
N032	333 *6*7	PU communication data length
N033	333 *6*7	PU communication stop bit length
N034	334 *6*7	RS-485 communication parity check selection
N035	335 *6*7	RS-485 communication retry count
N036	336 *6*7	RS-485 communication check time interval
N037	337 *6*7	RS-485 communication waiting time setting
N038	341 *6*7	RS-485 communication CR/LF selection
N040	547	USB communication station number
N041	548	USB communication check time interval
N080	343 *6*7	Communication error count
N100	541 *9	Frequency command sign selection
N110	434 *5	Network number (CC-Link IE)
N111	435 *5	Station number (CC-Link IE)
N240	349 *9	Ready bit status selection
N241	349 *9	Reset selection when inverter errors cleared
N242	349 *9	DriveControl writing restriction selection
N500 to N543, N550 to N559	1300 to 1343, 1350 to 1359	Communication option parameters. For details, refer to the Instruction Manual of the option.

◆ G: Control Parameter

Parameters for motor control.

Pr. group	Pr.	Name
G000	0	Torque boost Simple
G001	3	Base frequency Simple
G002	19	Base frequency voltage
G003	14	Load pattern selection
G010	46	Second torque boost
G011	47	Second V/F (base frequency)
G020	112	Third torque boost
G021	113	Third V/F (base frequency)
G030	60	Energy saving control selection
G040	100	V/F1 (first frequency)
G041	101	V/F1 (first frequency voltage)
G042	102	V/F2 (second frequency)
G043	103	V/F2 (second frequency voltage)
G044	104	V/F3 (third frequency)
G045	105	V/F3 (third frequency voltage)
G046	106	V/F4 (fourth frequency)
G047	107	V/F4 (fourth frequency voltage)
G048	108	V/F5 (fifth frequency)
G049	109	V/F5 (fifth frequency voltage)
G060	673 *7	SF-PR slip amount adjustment operation selection
G061	674 *7	SF-PR slip amount adjustment gain
G080	617	Reverse rotation excitation current low-speed scaling factor
G100	10	DC injection brake operation frequency
G101	11	DC injection brake operation time
G102	802	Pre-excitation selection
G103	850	Brake operation selection
G105	522	Output stop frequency
G106	250	Stop selection
G107	70 *3	Special regenerative brake duty
G108	1299	Second pre-excitation selection
G110	12	DC injection brake operation voltage
G120	882	Regeneration avoidance operation selection
G121	883	Regeneration avoidance operation level
G122	884	Regeneration avoidance at deceleration detection sensitivity
G123	885	Regeneration avoidance compensation frequency limit value
G124	886	Regeneration avoidance voltage gain
G125	665	Regeneration avoidance frequency gain
G130	660	Increased magnetic excitation deceleration operation selection
G131	661	Magnetic excitation increase rate
G132	662	Increased magnetic excitation current level
G200	800	Control method selection
G201	85	Excitation current break point
G202	86	Excitation current low-speed scaling factor
G203	245	Rated slip
G204	246	Slip compensation time constant
G205	247	Constant-power range slip compensation selection
G206	1116	Constant output range speed control P gain compensation
G210	803	Constant output range torque characteristic selection
G211	820	Speed control P gain 1
G212	821	Speed control integral time 1
G213	824	Torque control P gain 1 (current loop proportional gain)
G214	825	Torque control integral time 1 (current loop integral time)

Pr. group	Pr.	Name
G215	823 *1	Speed detection filter 1
G216	827	Torque detection filter 1
G217	854	Excitation ratio
G218	1115	Speed control integral term clear time
G220	877	Speed feed forward control/model adaptive speed control selection
G221	878	Speed feed forward filter
G222	879	Speed feed forward torque limit
G223	881	Speed feed forward gain
G224	828	Model speed control gain
G230	840	Torque bias selection
G231	841	Torque bias 1
G232	842	Torque bias 2
G233	843	Torque bias 3
G234	844	Torque bias filter
G235	845	Torque bias operation time
G236	846	Torque bias balance compensation
G237	847	Fall-time torque bias terminal 1 bias
G238	848	Fall-time torque bias terminal 1 gain
G240	367 *1	Speed feedback range
G241	368 *1	Feedback gain
G250	788 *7	Low speed range torque characteristic selection
G260	1121	Per-unit speed control reference frequency
G261	1117	Speed control P gain 1 (per-unit system)
G262	1119	Model speed control gain (per-unit system)
G263	1348	P/PI control switchover frequency
G264	1349	Emergency stop operation selection
G300	451	Second motor control method selection
G301	565	Second motor excitation current break point
G302	566	Second motor excitation current low-speed scaling factor
G311	830	Speed control P gain 2
G312	831	Speed control integral time 2
G313	834	Torque control P gain 2
G314	835	Torque control integral time 2
G315	833 *1	Speed detection filter 2
G316	837	Torque detection filter 2
G350	747 *7	Second motor low-speed range torque characteristic selection
G361	1118	Speed control P gain 2 (per-unit system)
G400	286	Droop gain
G401	287	Droop filter time constant
G402	288	Droop function activation selection
G403	994	Droop break point gain
G404	995	Droop break point torque
G410	653	Speed smoothing control
G411	654	Speed smoothing cutoff frequency
G420	679	Second droop gain
G421	680	Second droop filter time constant
G422	681	Second droop function activation selection
G423	682	Second droop break point gain
G424	683	Second droop break point torque
G601	1003	Notch filter frequency
G602	1004	Notch filter depth
G603	1005	Notch filter width
G932	89	Speed control gain (Advanced magnetic flux vector)
G942	569	Second motor speed control gain

*1 The setting is available only when a Vector control compatible option is installed. Refer to the Instruction Manual of each option for details.
*2 The parameter number in parentheses is the one for use with the LCD operation panel and the parameter unit.
*3 The setting is available for the standard model and the slim model (including the separated converter type of the slim model).
*4 The setting is not available for the separated converter type and the slim model (separated converter type).
*5 The setting is available only for the FR-A800-GF or when a compatible plug-in option is installed.
*6 The setting is not available for the FR-A800-E.
*7 Parameter for manufacturer setting for the FR-A842-P. Do not set.
*8 The setting is not available for the FR-A842-P.
*9 The setting is available for the FR-A800-GN or FR-A800-GF, or when a compatible plug-in option is installed.

● List of parameters for the FR-A800-E Ethernet communication (by function group)

◆ D: Operation command and frequency command

Parameters that specify the inverter's command source, and parameters that set the motor driving frequency and torque.

Pr. group	Pr.	Name
D012	550	NET mode operation command source selection
D013	551	PU mode operation command source selection

◆ M: Monitor display and monitor output signal

Parameters regarding the inverter's operating status. These parameters are used to set the monitors and output signals.

Pr. group	Pr.	Name
M400	190	RUN terminal function selection
M401	191	SU terminal function selection
M402	192	IPF terminal function selection
M403	193	OL terminal function selection
M404	194	FU terminal function selection
M405	195	ABC1 terminal function selection
M406	196	ABC2 terminal function selection
M410	313	DO0 output selection
M411	314	DO1 output selection
M412	315	DO2 output selection

◆ N: Operation via communication and its settings

Parameters for communication operation. These parameters set the communication specifications and operation.

Pr. group	Pr.	Name
N600	1434	IP address 1 (Ethernet)
N601	1435	IP address 2 (Ethernet)
N602	1436	IP address 3 (Ethernet)
N603	1437	IP address 4 (Ethernet)
N610	1438	Subnet mask 1
N611	1439	Subnet mask 2
N612	1440	Subnet mask 3
N613	1441	Subnet mask 4
N630	1427	Ethernet function selection 1
N631	1428	Ethernet function selection 2
N632	1429	Ethernet function selection 3
N641	1426	Link speed and duplex mode selection
N642	1455	Keepalive time
N643	1431	Ethernet signal loss detection function selection
N644	1432	Ethernet communication check time interval
N650	1424	Ethernet communication network number
N651	1425	Ethernet communication station number
N660	1442	IP filter address 1 (Ethernet)
N661	1443	IP filter address 2 (Ethernet)
N662	1444	IP filter address 3 (Ethernet)
N663	1445	IP filter address 4 (Ethernet)
N664	1446	IP filter address 2 range specification (Ethernet)
N665	1447	IP filter address 3 range specification (Ethernet)

Pr. group	Pr.	Name
N666	1448	IP filter address 4 range specification (Ethernet)
N670	1449	Ethernet command source selection IP address 1
N671	1450	Ethernet command source selection IP address 2
N672	1451	Ethernet command source selection IP address 3
N673	1452	Ethernet command source selection IP address 4
N674	1453	Ethernet command source selection IP address 3 range specification
N675	1454	Ethernet command source selection IP address 4 range specification
N681	1124	Station number in inverter-to-inverter link
N682	1125	Number of inverters in inverter-to-inverter link system

● List of parameters for the FR-A842-P parallel operation (by function group)

◆ E: Environment setting parameters

Parameters that set the inverter operation characteristics.

Pr. group	Pr.	Name
E390	1001	Parallel operation selection

◆ M: Monitor display and monitor output signal

Parameters regarding the inverter's operating status. These parameters are used to set the monitors and output signals.

Pr. group	Pr.	Name
M400	190	RUN terminal function selection
M401	191	SU terminal function selection
M402	192	IPF terminal function selection
M403	193	OL terminal function selection
M404	194	FU terminal function selection
M405	195	ABC1 terminal function selection
M406	196	ABC2 terminal function selection

◆ N: Operation via communication and its settings

Parameters for communication operation. These parameters set the communication specifications and operation.

Pr. group	Pr.	Name
N092	652	Parallel operation communication check time

● List of parameters for the FR-A800-GN CC-Link IE TSN communication (by function group)

◆ N: Operation via communication and its settings

Parameters for communication operation. These parameters set the communication specifications and operation.

Pr. group	Pr.	Name
N700	434	IP address 1
N701	435	IP address 2
N702	436	IP address 3
N703	437	IP address 4
N710	438	Sub-network mask 1
N711	439	Sub-network mask 2
N712	440	Sub-network mask 3
N713	441	Sub-network mask 4
N760	1442	IP filter address 1 (Ethernet)
N761	1443	IP filter address 2 (Ethernet)
N762	1444	IP filter address 3 (Ethernet)
N763	1445	IP filter address 4 (Ethernet)
N764	1446	IP filter address 2 range specification (Ethernet)
N765	1447	IP filter address 3 range specification (Ethernet)
N766	1448	IP filter address 4 range specification (Ethernet)
N746	1459	Clock source selection

● List of parameters for the FR-A800-F CC-Link IE TSN safety communication function (by function group)

◆ H: Protective function parameter

Parameters to protect the motor and the inverter.

Pr. group	Pr.	Name
H110	986	Display safety fault code

◆ N: Operation via communication and its settings

Parameters for communication operation. These parameters set the communication specifications and operation.

Pr. group	Pr.	Name
N700	434	IP address 1
N701	435	IP address 2
N702	436	IP address 3
N703	437	IP address 4
N710	438	Sub-network mask 1
N711	439	Sub-network mask 2
N712	440	Sub-network mask 3
N713	441	Sub-network mask 4
N741	1130	Link speed selection
N746	1459	Clock source selection
N760	1442	IP filter address 1 (Ethernet)
N761	1443	IP filter address 2 (Ethernet)
N762	1444	IP filter address 3 (Ethernet)
N763	1445	IP filter address 4 (Ethernet)
N764	1446	IP filter address 2 range specification (Ethernet)
N765	1447	IP filter address 3 range specification (Ethernet)
N766	1448	IP filter address 4 range specification (Ethernet)

Converter unit parameter list (by parameter number)

Set the necessary parameters to meet the load and operational specifications. Parameter setting, change and check can be performed from the operation panel (FR-DU08).

Function	Pr.	Pr. group	Name	Setting range	Minimum setting increments	Initial value	Customer setting
—	30	E300	Reset selection during power supply to main circuit	0, 100	1	0	
Automatic restart	57	A702	Restart selection	0, 9999	1	9999	
—	65 *1	H300	Retry selection	0 to 4	1	0	
Retry	67 *1	H301	Number of retries at fault occurrence	0 to 10, 101 to 110	1	0	
	68 *1	H302	Retry waiting time	0.1 to 600 s	0.1 s	1 s	
	69 *1	H303	Retry count display erase	0	1	0	
—	75	—	Reset selection/disconnected PU detection/ reset limit	14 to 17, 114 to 117	1	14	
		E100	Reset selection	0, 1		0	
		E101	Disconnected PU detection				
		E107	Reset limit				
—	77	E400	Parameter write selection	1, 2	1	2	
PU connector communication	117	N020	PU communication station number	0 to 31	1	0	
	118	N021	PU communication speed	48, 96, 192, 384, 576, 768, 1152	1	192	
	119	—	PU communication stop bit length / data length	0, 10	1	1	
		N022	PU communication data length	0, 1		0	
		N023	PU communication stop bit length	0, 1		1	
	120	N024	PU communication parity check	0 to 2	1	2	
	121	N025	Number of PU communication retries	0 to 10, 9999	1	1	
	122	N026	PU communication check time interval	0, 0.1 to 999.8 s, 9999	0.1 s	9999	
	123	N027	PU communication waiting time setting	0 to 150 ms, 9999	1 ms	9999	
	124	N028	PU communication CR/LF selection	0 to 2	1	1	
—	161	E200	Key lock operation selection	0, 10	1	0	
—	168	E000	Parameter for manufacturer setting.				
		E080					
—	169	E001					
		E081					
Cumulative monitor clear	170	M020	Watt-hour meter clear	0, 10, 9999	1	9999	
Input terminal function assignment	178	T700	RDI terminal function selection	7, 62, 9999	1	9999	
	187	T709	OH terminal function selection		1	7	
	189	T711	RES terminal function selection		1	62	
Output terminal function assignment	190	M400	RDB terminal function selection	2, 8, 11, 17, 25, 26, 64, 68, 90, 94, 95, 98, 99, 102, 108, 111, 125, 126, 164, 168, 190, 194, 195, 198, 199, 206, 207, 209, 210, 214, 227*2, 306, 307, 309, 310, 327*2, 9999	1	111	
	191	M401	RDA terminal function selection		1	11	
	192	M402	IPF terminal function selection		1	2	
	193	M403	RSO terminal function selection		1	209	
	194	M404	FAN terminal function selection		1	25	
	195	M405	ABC1 terminal function selection		1	99	
—	248	A006	Self power management selection	0 to 2	1	0	
Life check	255	E700	Life alarm status display	(0 to 15)	1	0	
	256	E701	Inrush current limit circuit life display	(0 to 100%)	1%	100%	
	257	E702	Control circuit capacitor life display	(0 to 100%)	1%	100%	

Function	Pr.	Pr. group	Name	Setting range	Minimum setting increments	Initial value	Customer setting
—	261	A730	Power failure stop selection	0, 1, 2, 21, 22	1	0	
—	268	M022	Monitor decimal digits selection	0, 1, 9999	1	9999	
—	269	E023	Parameter for manufacturer setting. Do not set.				
—	290	M044	Monitor negative output selection	0, 2, 4, 6	1	0	
Password function	296	E410	Password lock level	0 to 3, 5, 6, 100 to 103, 105, 106, 9999	1	9999	
	297	E411	Password lock/unlock	(0 to 5), 1000 to 9998, 9999	1	9999	
RS-485 communication	331 *1	N030	RS-485 communication station number	0, 31 (0, 247)	1	0	
	332 *1	N031	RS-485 communication speed	3, 6, 12, 24, 48, 96, 192, 384, 576, 768, 1152	1	96	
	333 *1	—	RS-485 communication stop bit length / data length	0, 1, 10, 11	1	1	
		N032	RS-485 communication data length	0, 1	1	0	
		N033	RS-485 communication stop bit length	0, 1	1	1	
	334 *1	N034	RS-485 communication parity check selection	0 to 2	1	2	
	335 *1	N035	RS-485 communication retry count	0 to 10, 9999	1	1	
	336 *1	N036	RS-485 communication check time interval	0 to 999.8 s, 9999	0.1 s	0 s	
	337 *1	N037	RS-485 communication waiting time setting	0 to 150 ms, 9999	1 ms	9999	
	341 *1	N038	RS-485 communication CR/LF selection	0 to 2	1	1	
	342	N001	Communication EEPROM write selection	0, 1	1	0	
	343 *1	N080	Communication error count	—	1	0	
Maintenance	503	E710	Maintenance timer 1	0 (1 to 9998)	1	0	
	504	E711	Maintenance timer 1 warning output set time	0 to 9998, 9999	1	9999	
—	539 *1	N002	MODBUS RTU communication check time interval	0 to 999.8 s, 9999	0.1 s	9999	
Communication	549 *1	N000	Protocol selection	0, 1	1	0	
—	563	M021	Energization time carrying-over times	(0 to 65535)	1	0	
—	598	H102	Undervoltage level	350 to 430 V, 9999	0.1 V	9999	
—	652 *2	N092	Parallel operation communication check time	0, 0.1 to 120 s, 9999	0.1 s	1 s	
—	663	M060	Control circuit temperature signal output level	0 to 100°C	1°C	0°C	
Maintenance	686	E712	Maintenance timer 2	0 (1 to 9998)	1	0	
	687	E713	Maintenance timer 2 warning output set time	0 to 9998, 9999	1	9999	
	688	E714	Maintenance timer 3	0 (1 to 9998)	1	0	
	689	E715	Maintenance timer 3 warning output set time	0 to 9998, 9999	1	9999	
Monitor function	774	M101	Operation panel monitor selection 1	2, 8, 13, 20, 25, 43, 44, 55, 62, 98, 9999	1	9999	
	775	M102	Operation panel monitor selection 2		1	9999	
	776	M103	Operation panel monitor selection 3		1	9999	
Protective Functions	872	H201	Input phase loss protection selection	0, 1	1	0	
—	876	T723	OH input selection	0 to 2	1	0	

Function	Pr.	Pr. group	Name	Setting range	Minimum setting increments	Initial value	Customer setting
Free parameters	888	E420	Free parameter 1	0 to 9999	1	9999	
	889	E421	Free parameter 2	0 to 9999	1	9999	
Energy saving monitor	891	M023	Cumulative power monitor digit shifted times	0, 4, 9999	1	9999	
PU	990	E104	PU buzzer control	0, 1	1	1	
Monitor function	992	M104	Operation panel setting dial push monitor selection	2, 8, 13, 20, 25, 43, 44, 55, 62, 98	1	8	
—	997	H103	Fault initiation	0 to 255, 9999	1	9999	
Parallel operation	1001 *2	E390	Parallel operation selection	1, 2, 100, 200, 300	1	100	
Clock function	1006	E020	Clock (year)	2000 to 2099	1	2000	
	1007	E021	Clock (month, day)	1/1 to 12/31	1	101	
	1008	E022	Clock (hour, minute)	0:00 to 23:59	1	0	
—	1048	E106	Display-off waiting time	0 to 60 min	1 min	0	
Clear parameters	Pr.CLR		Parameter clear	(0), 1	1	0	
	ALL.CL		All parameter clear	(0), 1	1	0	
	Err.CL		Fault history clear	(0), 1	1	0	
—	Pr.CPY		Parameter copy	(0), 1 to 3	1	0	
—	Pr.CHG		Initial value change list	—	1	0	
—	Pr.MD		Group parameter setting	(0), 1, 2	1	0	

*1 Parameter for manufacturer setting for the FR-CC2-P. Do not set.
*2 The parameter is available for the FR-CC2-P only.

The list of inverter protective functions

When the inverter detects a fault, depending on the nature of the fault, the operation panel displays an error message or warning, or a protective function is activated to trip the inverter.
Not all protective functions are available on all models. For details, refer to the Instruction Manual.

	Name	Description	Operation panel indication
Error message *2	Fault history	The operation panel stores the fault indications which appears when a protective function is activated to display the fault record for the past eight faults.	E- - - - -
	Operation panel lock	Appears when operation was tried during operation panel lock.	HOLd
	Password locked	Appears when a password restricted parameter is read/written.	LOCd
	Parameter write error	Appears when an error occurred during parameter writing.	Er 1 to Er4 ErB
	Copy operation error	Appears when an error occurred during parameter copying.	rE 1 to rE8
	Error	Appears when the RES signal is on or the PU and inverter can not make normal communication.	Err.
Warning *3	Stall prevention (overcurrent)	Appears during overcurrent stall prevention.	OL
	Stall prevention (overvoltage)	Appears during overvoltage stall prevention. Appears while the regeneration avoidance function is activated.	oL
	Regenerative brake pre-alarm *7	Appears if the regenerative brake duty reaches or exceeds 85% of the **Pr.70 Special regenerative brake duty** value. If the regenerative brake duty reaches 100%, a regenerative overvoltage (E. OV[]) occurs. (Standard model only. For the slim model (including the separated converter type), built-in brake transistor model only.)	Rb
	Electronic thermal relay function pre-alarm	Appears when the electronic thermal O/L relay has reached 85% of the specified value.	TH
	PU stop	Appears if STOP RESET is pressed in an operation mode other than the PU operation mode.	PS
	Speed limit indication (output during speed limit)	Appears if the speed limit level is exceeded during torque control.	SL
	Continuous operation during communication fault	Appears when the operation continues while an error is occurring in the communication line or communication option (when **Pr.502** = "4").	CF
	Parameter copy	Appears when parameter copy is performed between inverters FR-A820-03160(55K) or lower, FR-A840-01800(55K) or lower, FR-A820-03800(75K) or higher and FR-A840-02160(75K) or higher	CP
	Safety stop	Appears when safety stop function is activated (during output shutoff).	SA
	Maintenance timer 1 to 3 *7	Appears when the inverter's cumulative energization time reaches or exceeds the parameter set value.	MT 1 to MT3
	USB host error	Appears when an excessive current flows into the USB A connector.	UF
	Emergency drive in operation	Appears during emergency drive operation.	Ed
	Home position return error	Appears when an error occurs during the home position return operation under position control.	HP 1 to HP3
	24 V external power supply operation	Blinks when the main circuit power supply is off and the 24 V external power supply is being input.	EV
	Load fault warning *7	Appears when the load is deviated from the upper or lower limit of the warning detection range.	LdF
	Ethernet communication fault	Appears when Ethernet communication is interrupted by physical factors.	EHR
	Duplicate IP address	Appears when a duplicate IP address is detected.	dI P
	IP address fault	Appears when the rotary switches are set to "0 or 255" and the value set for IP address or subnet mask is out of range.	I P
Alarm *4	Fan alarm	Appears when the cooling fan remains stopped when operation is required or when the speed has decreased.	FN
	Internal fan alarm	Appears when the internal fan fails, or at a reference replacement time. (IP55 compatible models only)	FN2
Fault *5	Overcurrent trip during acceleration	Appears when an overcurrent occurred during acceleration.	E. OC 1
	Overcurrent trip during constant speed	Appears when an overcurrent occurred during constant speed operation.	E. OC2
	Overcurrent trip during deceleration or stop	Appears when an overcurrent occurred during deceleration and at a stop.	E. OC3
	Output short-circuit	The inverter output is shut off when an output short-circuit is detected while **Pr.521** = "1". When **Pr.521** = "0" (initial value), E.OC1, E.OC2, or E.OC3 appears when an output short-circuit is detected.	E. SCF
	Overcurrent trip	The output from a slave inverter in parallel operation is shut off if the input current exceeds the specified level.	E. OCT
	Regenerative overvoltage trip during acceleration	Appears when an overvoltage occurred during acceleration.	E. OV 1
	Regenerative overvoltage trip during constant speed	Appears when an overvoltage occurred during constant speed operation.	E. OV2
	Regenerative overvoltage trip during deceleration or stop	Appears when an overvoltage occurred during deceleration and at a stop.	E. OV3
	Overvoltage trip	If the DC voltage at the main circuit in a slave inverter in parallel operation reaches or exceeds the specified value, the protective circuit is activated to stop the inverter output. The circuit may also be activated by a surge voltage produced in the power supply system.	E. OVT
	Inverter overload trip (electronic thermal relay function) *1	Appears when the electronic thermal relay function for inverter element protection was activated.	E. THT
	Motor overload trip (electronic thermal relay function) *1	Appears when the electronic thermal relay function for motor protection was activated.	E. THM
	Heat sink overheat	Appears when the heat sink overheated.	E. FIN

	Name	Description	Operation panel indication
Fault *5	Instantaneous power failure	Appears when an instantaneous power failure occurred at an input power supply. (This function is not available in the separated converter type and the slim model (separated converter type).)	E. IPF
	Undervoltage	Appears when the main circuit DC voltage became low. (This function is not available in the separated converter type and the slim model (separated converter type).)	E. UVT
	Input phase loss *7	Appears if one of the three phases on the inverter input side opened. (This function is not available in the separated converter type and the slim model (separated converter type).)	E. ILF
	Stall prevention stop	Appears 3 s after the output frequency is reduced to the reference value by the stall prevention (torque limit) operation.	E. OLT
	Loss of synchronism detection	The inverter trips when the motor operation is not synchronized. This function is only available under PM sensorless vector control.	E. SOT
	Upper limit fault detection *7	Appears when the load exceeds the upper limit of the fault detection range.	E. LUP
	Lower limit fault detection *7	Appears when the load falls below the lower limit of the fault detection range.	E. LdN
	Brake transistor alarm detection	The inverter trips if an alarm occurs in the brake circuit, e.g. damaged brake transistors. In this case, the inverter must be powered off immediately. (Standard model only. For the slim model (including the separated converter type), built-in brake transistor model only.) (Appears when an internal circuit fault occurred for separated converter types and IP55 compatible models.)	E. bE
	Output side earth (ground) fault overcurrent	Appears when an earth (ground) fault occurred on the inverter's output side.	E. GF
	Output phase loss	Appears if one of the three phases on the inverter output side opened.	E. LF
	External thermal relay operation *7	Appears when the external thermal relay connected to terminal OH is activated.	E. OHT
	PTC thermistor operation *7	The inverter trips if resistance of the PTC thermistor connected between terminal 2 and terminal 10 has reached the **Pr.561 PTC thermistor protection level** setting or higher.	E. PTC
	Option fault	Appears when torque command by the plug-in option is selected using **Pr.804** and no plug-in option is mounted, or if the AC power supply is accidentally connected to terminal R/L1, S/L2, or T/L3 while **Pr.30** = "2 or 102" to connect a high power factor converter or multifunction regeneration converter.	E. OPT
	Communication option fault	Appears when a communication line error occurs in the communication option.	E. OP1 to E. OP3
	Parallel operation slave 1 fault	Appears on the master inverter when a fault occurs in the slave inverter during the parallel operation. Appears on the master inverter even when the RS-485 terminals are incorrectly connected.	E. PA1
	Parallel operation slave 2 fault		E. PA2
	Parameter storage device fault (control board)	Appears when operation of the element where parameters stored became abnormal.	E. PE
	PU disconnection	Appears when a communication error between the PU and inverter occurred, the communication interval exceeded the permissible time during the RS-485 communication with the PU connecter, or communication errors exceeded the number of retries during the RS-485 communication.	E. PUE
	Retry count excess *7	Appears when the operation was not restarted within the set number of retries.	E. RET
	Parameter storage device fault (main circuit board)	Appears when operation of the element where parameters stored became abnormal.	E. PE2
	Internal storage device fault	This protective function is activated by an inverter reset if writing data fails due to power-OFF or a data fault occurs in the storage device during parameter operations*8.	E. PE6
	CPU fault	Appears during the CPU and peripheral circuit errors occurred.	E. CPU E. 5 to E. 7
	Operation panel power supply short circuit/RS-485 terminals power supply short circuit	Appears when the RS-485 terminal power supply or operation panel power supply was shorted.	E. CTE
	24 VDC power fault	When the 24 VDC power output via terminal PC is shorted, or when the external 24 VDC power supplied to terminal +24 is not enough, this function shuts off the power output.	E. P24
	Abnormal output current detection *7	Appears when the output current is out of the output current detection range set by parameters.	E. CdO
	Inrush current limit circuit fault	Appears when the resistor of the inrush current limit circuit overheated. (This function is not available in the separated converter type and the slim model (separated converter type).)	E. IOH
	Communication fault (inverter)	Appears when a communication error occurred during the RS-485 communication with the RS-485 terminals.	E. SER
	Analog input fault	Appears when 30 mA or more is input or a voltage (7.5 V or more) is input with terminal 2/4 set to current input.	E. AIE
	USB communication fault	Appears when USB communication error occurred.	E. USb
	Safety circuit fault	The inverter trips when a safety circuit fault occurs.	E. SAF
	Overspeed occurrence	Indicates that the motor speed has exceeded the overspeed setting level **(Pr.374)**.	E. OS
	Speed deviation excess detection *6 *7	Stops the inverter output if the motor speed is increased or decreased under the influence of the load etc. during vector control and cannot be controlled in accordance with the speed command value.	E. OSd
	Signal loss detection *6 *7	Stops the inverter output if the encoder signal is shut off.	E. ECT
	Excessive position fault *6 *7	Indicates that the difference between the position command and position feedback exceeded the reference.	E. Od
	Encoder signal loss for orientation *6 *7	The inverter output is shut off when the machine end encoder signal is shut off during machine end orientation control under Vector control.	E. ECA
	Brake sequence fault *7	The inverter output is stopped when a sequence error occurs during use of the brake sequence function **(Pr.278 to Pr.285)**.	E. Mb1 to E. Mb7
	Encoder phase fault *6 *7	When the rotation command of the inverter differs from the actual motor rotation direction detected from the encoder, the inverter output is stopped.	E. EP

	Name	Description	Operation panel indication
Fault *5	**Magnetic pole position unknown** *6	When the offset value between the motor home magnetic pole position and the resolver home position is unknown, the protective circuit is activated to stop the inverter output.	E. MP
	External fault during output operation *7	When the X32 signal turns OFF (the contact opens) due to an external fault or other factor, the inverter output is shut off.	E. EF
	Abnormal internal temperature	The inverter output is stopped when the internal temperature of the inverter rises abnormally. (IP55 compatible models only)	E. IAH
	4 mA input fault *7	The inverter trips when the analog input current is 2 mA or less for the time set in **Pr.778 4 mA input check filter**.	E. LCI
	Pre-charge fault *7	The inverter trips when the pre-charge time exceeds **Pr.764 Pre-charge time limit**. The inverter trips when the measured value exceeds **Pr.763 Pre-charge upper detection level** during pre-charging.	E. PCH
	PID signal fault *7	The inverter trips if the measured value exceeds the PID upper limit or PID lower limit parameter setting, or the absolute deviation value exceeds the PID deviation parameter setting during PID control.	E. PID
	Option fault	The inverter trips when a contact fault is found between the inverter and the plug-in option, or when the communication option is not connected to the connector 1.	E. 1 to E. 3
	Ethernet communication fault	If Ethernet communication is interrupted by physical factors or a no-communication state persists for the permissible time or longer, the inverter trips.	E. EHR
	Opposite rotation deceleration fault *7	The speed may not decelerate during low speed operation if the rotation direction of the speed command and the estimated speed differ when the rotation is changing from forward to reverse or from reverse to forward under real sensorless vector control. At this time, the inverter output is stopped if the rotation direction will not change, causing overload.	E. 11
	Internal circuit fault	Appears when an internal circuit error occurred.	E. PbT E. 13
	User definition error by the PLC function	Appears when the values 16 to 20 are set in the device SD1214 with the program operation of the PLC function.	E. 16 to E. 20

*1 Resetting the inverter initializes the internal cumulative heat value of the electronic thermal O/L relay function.
*2 The error message shows an operational error. The inverter output is not shut off.
*3 Warnings are messages given before faults occur. The inverter output is not shut off.
*4 Alarm warn the operator of failures with output signals. The inverter output is not shut off.
*5 When faults occur, the protective functions are activated to shut off the inverter output and output the alarms.
*6 Appears when a vector control compatible option is installed. (The protective function may or may not be available depending on the type of the connected communication option.)
*7 This protective function is not available in the initial status.
*8 For example, when Parameter clear, All parameter clear, Parameter copy, or offline auto tuning is performed in the inverter, or when parameter batch write is performed in FR Configurator2.

The list of converter unit protective functions

When the converter unit detects a fault, depending on the nature of the fault, the operation panel displays an error message or warning, or a protective function is activated to trip the inverter.
Not all protective functions are available on all models. For details, refer to the Instruction Manual.

	Name	Description	Operation panel indication
Error message *2	Fault history	The operation panel stores the fault indications which appears when a protective function is activated to display the fault record for the past eight faults.	E- - - - -
	Operation panel lock	Appears when operation was tried during operation panel lock.	HOLd
	Password locked	Appears when a password restricted parameter is read/written.	LOCd
	Parameter write error	Appears when an error occurred during parameter writing.	Er 1
	Copy operation error	Appears when an error occurred during parameter copying.	rE 1 to rE4
	Error	Appears when the RES signal is on or the PU and converter unit can not make normal communication.	Err.
Warning *3	Electronic thermal relay function pre-alarm	Appears when the electronic thermal O/L relay has reached 85% of the specified value.	TH
	Maintenance timer 1 to 3 *7	Appears when the converter unit's cumulative energization time reaches or exceeds the parameter set value.	MT 1 to MT3
	Emergency drive in operation	Appears during emergency drive operation.	Ed
	24 V external power supply operation	Blinks when the main circuit power supply is off and the 24 V external power supply is being input.	EV
Alarm *4	Fan alarm	Appears when the cooling fan remains stopped when operation is required or when the speed has decreased.	FN
Fault *5	Overvoltage trip	Appears when the converter unit's internal main circuit DC voltage exceeds the specified value.	E. OVT
	Converter overload trip (electronic thermal relay function) *1	Appears when the electronic thermal O/L relay of the converter unit diode module is activated.	E. THC
	Heat sink overheat	Appears when the heat sink overheated.	E. FIN
	Instantaneous power failure	Appears when an instantaneous power failure occurred at an input power supply.	E. IPF
	Undervoltage	Appears when power supply voltage of the converter unit is set at a low level.	E. UVT
	Input phase loss *7	Appears if one of the three phases on the converter unit input side opened.	E. ILF
	External thermal relay operation *6	Appears when the external thermal relay connected to terminal OH is activated.	E. OHT
	Parallel operation slave 1 fault	Appears on the operation panel of the master at an occurrence of a slave converter fault during the parallel operation. Appears on the master converter unit even when the RS-485 terminals are incorrectly connected.	E. PA1
	Parallel operation slave 2 fault		E. PA2
	Parameter storage device fault (control board)	Appears when operation of the element where parameters stored became abnormal. (control board)	E. PE
	PU disconnection	Appears when a communication error between the PU and inverter occurred, the communication interval exceeded the permissible time during the RS-485 communication with the PU connecter, or communication errors exceeded the number of retries during the RS-485 communication.	E. PUE
	Retry count excess *7	Appears when the operation was not restarted within the set number of retries.	E. RET
	Parameter storage device fault (main circuit board)	Appears when operation of the element where parameters stored became abnormal. (main circuit board)	E. PE2
	CPU fault	Appears during the CPU and peripheral circuit errors occurred.	E. CPU E. 5 to E. 7
	Operation panel power supply short circuit/RS-485 terminals power supply short circuit	Appears when the RS-485 terminal power supply or operation panel power supply was shorted.	E. CTE
	24 VDC power fault	When the 24 VDC power output via terminal PC is shorted, or when the external 24 VDC power supplied to terminal +24 is not enough, this function shuts off the power output.	E. P24
	Inrush current limit circuit fault	Appears when the resistor of the inrush current limit circuit overheated.	E. IOH
	Communication fault (inverter)	Appears when a communication error occurred during the RS-485 communication with the RS-485 terminals.	E. SER
	Internal circuit fault	Appears when an internal circuit error occurred.	E. PbT
			E. 13
	Option fault	The inverter trips if a plug-in option is disconnected while the converter unit power is ON.	E. 1

*1 Resetting the converter unit initializes the internal cumulative heat value of the electronic thermal O/L relay function.
*2 The error message shows an operational error. The inverter output is not shut off.
*3 Warnings are messages given before faults occur. The inverter output is not shut off.
*4 Alarm warn the operator of failures with output signals. The inverter output is not shut off.
*5 When faults occur, the protective functions are activated to shut off the inverter output and output the alarms.
*6 The external thermal operates only when the OH signal is set in **Pr.178, Pr.180, Pr.187 or Pr.189 (input terminal function selection)**.
*7 This protective function is not available in the initial status.

Option List

By fitting the following options to the inverter, the inverter is provided with more functions.
Three plug-in options can be fitted at a time. Two or more of the same options cannot be fitted, and only one communication option can be fitted at a time. (Two options (except for communication options) can be fitted to the FR-A800-GF at a time.)

Name		Type	Applications, Specifications, etc.	Applicable Inverter
Plug-in Type	Vector control	FR-A8AP FR-A8AL	Vector control can be performed for encoder-equipped motors (induction motors).	Shared among all models
		FR-A8APR*1 FR-A8APS*1 FR-A8APA*1	Vector control can be performed for encoder-equipped motors (induction/PM motors).	
	Orientation control Encoder feedback control	FR-A8AP FR-A8APR*1 FR-A8APS*1 FR-A8APA*1 FR-A8AL	The main spindle can be stopped at a specified position (orientation) in combination with an encoder. The motor speed is sent back and the speed is maintained constant.	
	Position control	FR-A8AL	The external pulse train input enables position control. Connection with the positioning module of a programmable controller is also available.	
		FR-A8APS*1	Position control using point tables is enabled.	
	Encoder pulse dividing output	FR-A8AL FR-A8APD*1	The encoder pulse can be divided for the signal output.	
	16-bit digital input	FR-A8AX	This input interface enables accurate frequency setting of the inverter using an external BCD or binary digital signal. • BCD code 3 digits / 4 digits • Binary 12 bits / 16 bits	
	Digital output Extension analog output	FR-A8AY	Output signals provided with the inverter as standard are selected to output from the open collector.	
			This option adds 2 different signals that can be monitored such as the output frequency and output voltage. 20mADC or 10VDC meter can be connected.	
	Relay output	FR-A8AR	Output any three output signals available with the inverter as standard from the relay contact terminals.	
	Bipolar analog output High resolution analog input Motor thermistor interface *2	FR-A8AZ	This option adds different signals that can be monitored such as the motor torque and torque command by the ±10 V output. Highly accurate operation is achieved by using high-resolution analog input (16 bits). Thermistor-equipped motors can detect the motor temperature, and the temperature feedback is used to reduce the fluctuation of output torque.	
	Changeover between inverter and high power factor converter	FR-A8AVP	The inverter can be set to be used as a high power factor converter. The high power factor converter switches the converter section ON/OFF to reshape an input current waveform into a sine wave, greatly suppressing harmonics.	Separated converter types
	Dedicated filter capacitor	FR-A8BC		
	Dedicated filter reactor	FR-A8BL1		
	Dedicated reactor for PWM control	FR-A8BL2		
	Dedicated circuit parts for inrush current protection	FR-A8MC		
	Phase detection transformer box	FR-A8VPB		
	Phase-synchronized bypass switching	FR-A8AVP	This option allows smooth switching of the motor power supply from the inverter output power to the commercial power.	400 V class
	Phase detection transformer box	FR-A8VPB		
	Communication: CC-Link IE TSN communication	FR-A8NCG*1	This option allows the inverter to be operated or monitored or the parameter setting to be changed from a computer or programmable controller.	Shared among all models
	Communication: CC-Link IE Field Network communication	FR-A8NCE		
	Communication: CC-Link communication	FR-A8NC		
	Communication: SSCNET III(/H) communication	FR-A8NS		
	Communication: DeviceNet communication	FR-A8ND		
	Communication: PROFIBUS-DP communication	FR-A8NP		
	Communication: FL remote communication	FR-A8NF		
	Communication: CC-Link IE TSN safety communication	FR-A8NCG-S		FR-A800-F
Control terminal	Screw terminal block	FR-A8TR	The screw type control circuit terminal block enables wiring using round crimping terminals.	Shared among all models *3
	Vector control terminal block	FR-A8TP	The control circuit terminal block equipped with the encoder power supply (24 VDC output) enables orientation control, encoder feedback control, vector control, encoder pulse division output with encoder-equipped motors (induction motors). (The 24 VDC power supply can be used for the encoder of the SF-V5RU.)	Shared among all models

	Name	Type	Applications, Specifications, etc.	Applicable Inverter
Stand-alone type	Liquid crystal display operation panel	FR-LU08(-01)	Graphical operation panel with liquid crystal display *5	Shared among all models
	Parameter unit	FR-PU07	Interactive parameter unit with LCD display	
	Parameter unit with battery pack	FR-PU07BB(-L) *6	Enables parameter setting without supplying power to the inverter.	
	Parameter unit connection cable	FR-CB20[]	Cable for connection of operation panel or parameter unit. [] indicates a cable length. (1m, 3m, 5m)	
	USB cable	MR-J3USBCBL3M Cable length: 3 m	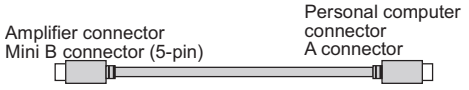	
	Operation panel connection connector	FR-ADP	Connector to connect the operation panel (FR-DU08) and connection cable	
	Encoder cable Mitsubishi Electric vector control dedicated motor (SF-V5RU)	FR-V7CBL[]	Connection cable for the inverter and encoder for Mitsubishi Electric vector control dedicated motor (SF-V5RU). [] indicates a cable length. (5m, 15m, 30m)	
	Control circuit terminal block intercompatibility attachment	FR-A8TAT	An attachment for installing the control circuit terminal block of the FR-A700/A500 series to that of the FR-A800 series	
	Panel through attachment	FR-A8CN	The heat sink of the inverter can be protruded outside the enclosure. For the enclosure cut dimensions, refer to **page 61**.	FR-A820-00105(1.5K) to FR-A820-04750(90K) FR-A840-00023(0.4K) to FR-A840-03610(132K) According to capacities
	Intercompatibility attachment	FR-AAT	Attachment for replacing with the A800 series using the installation holes of the FR-A700/A500/A200E series.	According to capacities
		FR-A5AT		
	AC reactor	FR-HAL	For harmonic current reduction and inverter input power factor improvement	
	DC reactor	FR-HEL		
	Balance reactor	FR-POL	This option is used when the cable length from an inverter to the node point is less than 10 m.	FR-A842-P. According to capacities.
	Line noise filter	FR-BSF01	For line noise reduction	Shared among all models
		FR- BLF		
	High-duty brake resistor	FR-ABR	The regenerative braking capability can be improved (permissible duty 10%/6%ED).	FR-A820-01250(22K) or lower, FR-A840-00620(22K) or lower *4
	Brake unit	FR-BU2	For increasing the braking capability of the inverter (for high-inertia load or negative load) Brake unit and resistor unit are used in combination	According to capacities
	Resistor unit	FR-BR		FR-A820-03160(55K) or lower, FR-A840-01800(55K) or lower *4
		MT-BR5		FR-A820-03800(75K) or higher, FR-A840-02160(75K) or higher *4
	Multifunction regeneration converter Dedicated stand-alone reactor Dedicated box-type reactor	FR-XC FR-XCL/FR-XCG FR-XCB	One inverter can handle harmonic suppression and power regeneration. Functions that match the application can be selected by combining the inverter/converter with the dedicated reactor FR-XCB (box-type) or FR-XCL/FR-XCG.	According to capacities
	High power factor converter	FR-HC2	The high power factor converter switches the converter section on/off to reshape an input current waveform into a sine wave, greatly suppressing harmonics. (Used in combination with the standard accessory.)	According to capacities
	Surge voltage suppression filter	FR-ASF	Filter for suppressing surge voltage on motor	FR-A840-01800(55K) or lower *4
		FR-BMF		FR-A840-00170(5.5K) to FR-A840-00930(37K) *4 According to capacities
	Sine wave filter — Reactor	MT- BSL (-HC)	Reduce the motor noise during inverter driving Use in combination with a reactor and a capacitor	FR-A820-03800(75K) or higher, FR-A840-02160(75K) or higher *4 According to capacities
	Sine wave filter — Capacitor	MT- BSC		
Others	Pilot generator	QVAH-10	For tracking operation. 70V/35VAC 500Hz (at 2500r/min)	Shared among all models
	Deviation sensor	YVGC-500W-NS	For continuous speed control operation (mechanical deviation detection) Output 90VAC/90°	
	Analog frequency meter (64mm × 60mm)	YM-206NRI 1mA	Dedicated frequency meter (graduated to 130Hz). Moving-coil type DC ammeter	
	Calibration resistor	RV24YN 10kΩ	For frequency meter calibration. Carbon film type B characteristic	
	FR Configurator2 (Inverter setup software)	SW1DND-FRC2-E	Supports an inverter startup to maintenance.	
	FR Configurator Mobile (Mobile app for inverters)	—	Enables operation of inverters using smart phones or tablets.	FR-A800-E

*1 Not available for the FR-A842-P.
*2 The motor thermistor interface is not available when the FR-A842-P is used.
*3 Not available for the FR-A800-E.
*4 Applicable inverters for the ND rating. For the SLD, LD, and HD ratings, different inverters are used depending on the applicable motor capacity.
*5 The battery (CR1216: a diameter of 12 mm, a height of 16 mm) is not bundled.
*6 To use a parameter unit with battery pack (FR-PU07BB) outside Japan, order a "FR-PU07BB-L" (parameter unit type indicated on the package has L at the end). Since batteries may conflict with laws in countries to be used (new EU Directive on batteries and accumulators, etc.), batteries are not enclosed with an FR-PU07BB-L.

Changeover between inverter and high power factor converter

Name (model)	Specification and structure
Changeover between inverter and high power factor converter **FR-A8AVP** **FR-A8VPB-H** **FR-A8BL1-H[]** **FR-A8BL2-H[]** **FR-A8BC-H[]** **FR-A8MC-H[]**	Certain inverters can be changed to high power factor converters by installing the FR-A8AVP and configuring its parameters. The following options are needed to use the converter: phase detection transformer box, dedicated filter reactor, dedicated reactor for PWM control, dedicated filter capacitor, inrush current limit resistor. The converter can be changed back to an inverter.

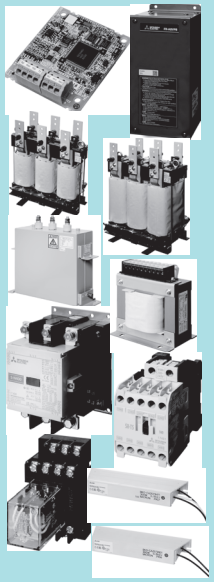

• Option lineup for the converter

Peripheral device	Component model	Name
FR-A8VPB-H	FR-A8VPB-H	Phase detection transformer box
FR-A8BL1-H[]	FR-A8BL1-H[]	Dedicated filter reactor
FR-A8BL2-H[]	FR-A8BL2-H[]	Dedicated reactor for PWM control
FR-A8BC-H[]	FR-A8BC-H[]	Dedicated filter capacitor

Peripheral device	Component model	Name
FR-A8MC-H[]		Dedicated circuit parts for inrush current protection
	BKO-CA2573H01	Inrush current limit resistor (without thermostat)
	BKO-CA2573H11	Inrush current limit resistor (with thermostat)
	BKO-CA2571H01	Stepdown transformer for power source of magnetic contactor (400 to 220 V)
	S-N400 AC200V 2A2B	Inrush current limit magnetic contactor
	SR-T5 AC200V 5A	Buffer relay
	MYQ4Z AC200/220	Mini relay
	PYF14T	Mini relay terminal block
	PYC-A1	Mini relay clip

• Combination table

Capacity required	Converter	Phase detection option	Phase detection transformer box	Dedicated filter reactor	Dedicated reactor for PWM control	Dedicated filter capacitor	Dedicated circuit parts for inrush current protection
315kW	FR-A842-315K	FR-A8AVP	FR-A8VPB-H	FR-A8BL1-H315K	FR-A8BL2-H315K	FR-A8BC-H400K	FR-A8MC-H355K
355kW	FR-A842-355K			FR-A8BL1-H355K	FR-A8BL2-H355K		
400kW	FR-A842-400K			FR-A8BL1-H400K	FR-A8BL2-H400K		FR-A8MC-H500K
450kW	FR-A842-450K			FR-A8BL1-H450K	FR-A8BL2-H450K	FR-A8BC-H500K	
500kW	FR-A842-500K			FR-A8BL1-H500K	FR-A8BL2-H500K		

• Converter rated specifications

Model FR-A842-[]	07700	08660	09620	10940	12120
	315K	355K	400K	450K	500K
Applicable inverter capacity (kW)	315	355	400	450	500
Rated output capacity∗1	375	423	476	536	595
Rated voltage (V)∗2∗3	Three-phase 380 to 500 V 50 Hz/60 Hz∗6∗7				
Rated current (A)	564	636	716	806	895
Overload current rating∗4	150% 60s				
Permissible power supply voltage fluctuation	323 to 506 V 50 Hz/60 Hz				
Permissible power supply frequency fluctuation	±5%				
Input power factor	0.99 or more (when load ratio is 100%)				
Power supply capacity (kVA)	456	515	580	652	724
Protective structure of the converter∗5	Open type (IP00)				
Cooling system	Forced air				
Approx. mass (kg)	163	163	243	243	243

∗1 DC output capacity when the input voltage is 400 VAC. Multiple ratings are not supported.
∗2 Change the stepdown transformer tap according to the input voltage.
∗3 The output voltage is approx. 594 VDC at an input voltage of 400 VAC, approx. 653 VDC at 440 VAC, and approx. 742 VDC at 500 VAC.
∗4 The percentage of the overload current rating is the ratio of the overload current to the converter's rated input current. For repeated duty, allow time for the temperatures of the converter and the inverter to return to or below the temperatures under 100% load.
∗5 FR-DU08: IP40 (except for the PU connector)
∗6 The permissible voltage imbalance ratio is 3% or less. (Imbalance ratio = (highest voltage between lines - average voltage between three lines)/ average voltage between three lines × 100)
∗7 The rated voltage when connecting a motor to the FR-A840-02160(75K) and FR-F840-02160(90K) or higher. If connecting a motor to inverters other than those mentioned above, the rated voltage is 380 to 480 V.

Name (model)	Specification and structure

Changeover between inverter and high power factor converter
FR-A8AVP
FR-A8VPB-H
FR-A8BL1-H[]
FR-A8BL2-H[]
FR-A8BC-H[]
FR-A8MC-H[]

• Connection diagram

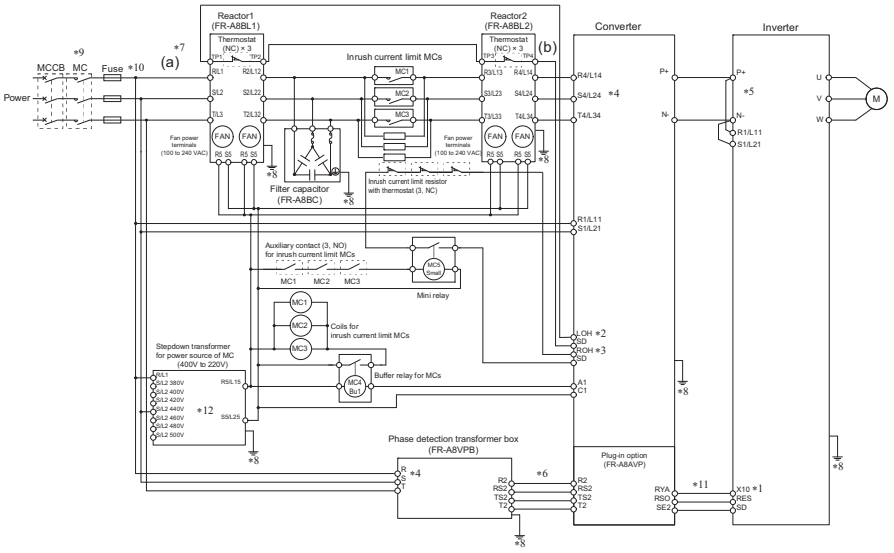

∗1 Use the Input terminal function selection to assign the X10 signal to a terminal. The signal is assigned to terminal MRS in the initial status.
∗2 The LOH signal function is assigned to terminal RT in the initial status. Set "33" in any of **Pr.178 to Pr.189** (Input terminal function selection) to assign the LOH signal to another terminal.
∗3 The ROH signal function is assigned to terminal AU in the initial status. Set "34" in any of **Pr.178 to Pr.189** (input terminal function selection) to assign the ROH signal to another terminal.
∗4 Confirm the correct voltage phase sequence between the converter (terminals R4/L14, S4/L24, and T4/L34) and the phase detection transformer box (terminals R, S, and T).
∗5 Do not install any MCCB between the inverter and the converter (P to P and N to N). Connecting opposite polarity of terminals P and N will damage the converter and the inverter.
∗6 Always connect terminals R2, RS2, TS2, and T2 of the FR-A8AVP installed on the converter and the identically-named terminals of the phase detection transformer box. If the inverter is operated without connecting between the terminals, the converter will be damaged.
∗7 Do not install an MCCB or MC between the reactor 1 input terminals (R/L1, S/L2, and T/L3) (a) and the converter input terminals (R4/L14, S4/L24, and T4/L34) (b) except for those specified in the connection diagram. Doing so disrupts proper operation (except for the inrush current limit MC).
∗8 Securely perform grounding (earthing) by using the grounding (earthing) terminal.
∗9 Install an MC for each phase.
∗10 Install the UL listed fuse (specified in the Instruction Manual of the FR-A8AVP) on the input side to meet the UL/cUL standards.
∗11 Always connect terminal RYA on the FR-A8AVP (installed on the converter) and the inverter terminal to which the X10 signal is assigned, and connect terminal SE2 on the FR-A8AVP and the inverter terminal SD (terminal PC in the source logic). Failure to do so may lead to damage of the converter.
∗12 Select a terminal S/L2 according to the input voltage.

• Outline dimension drawings
This is an example of the outer appearance, which differs depending on the model.

<<FR-A8BL1-H315K to H500K>>

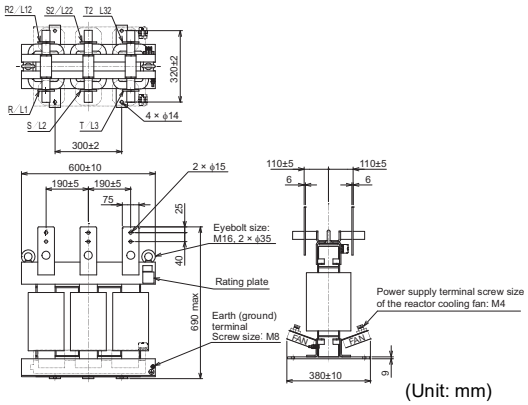

(Unit: mm)

<<FR-A8BL2-H315K to H500K>>

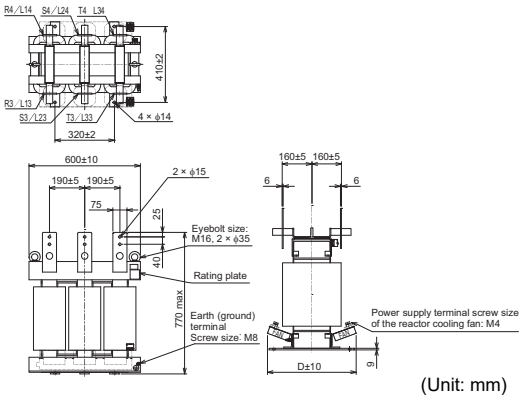

(Unit: mm)

Model name	Mass
FR-A8BL1-H315K	198kg
FR-A8BL1-H355K	209kg
FR-A8BL1-H400K	209kg
FR-A8BL1-H450K	209kg
FR-A8BL1-H500K	215kg

Model name	Mass
FR-A8BL2-H315K	380kg
FR-A8BL2-H355K	385kg
FR-A8BL2-H400K	429kg
FR-A8BL2-H450K	457kg
FR-A8BL2-H500K	457kg

Model name	D
FR-A8BL2-H315K to H355K	460
FR-A8BL2-H400K to H500K	480

Name (model)	Specification and structure

Changeover between inverter and high power factor converter
FR-A8AVP
FR-A8VPB-H
FR-A8BL1-H[]
FR-A8BL2-H[]
FR-A8BC-H[]
FR-A8MC-H[]

<<FR-A8VPB-H>>

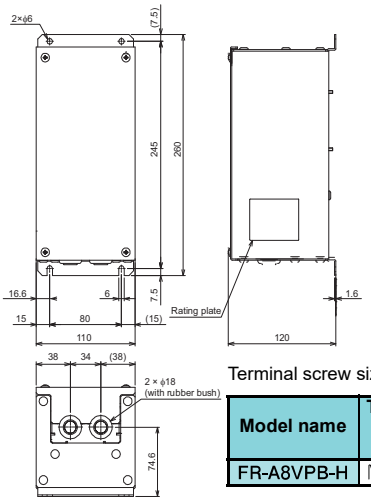

Terminal block

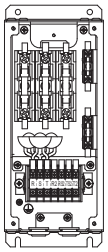

(Unit: mm)
Mass: 3.2 kg

Terminal screw size

Model name	Terminals R, S, T, R2, RS2, TS2, and T2	Earth (ground) terminal
FR-A8VPB-H	M3.5	M3.5

<<FR-A8BC-H400K>>

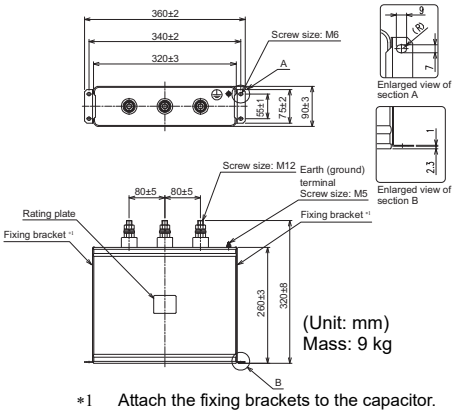

(Unit: mm)
Mass: 9 kg

*1 Attach the fixing brackets to the capacitor.

<<FR-A8BC-H500K>>

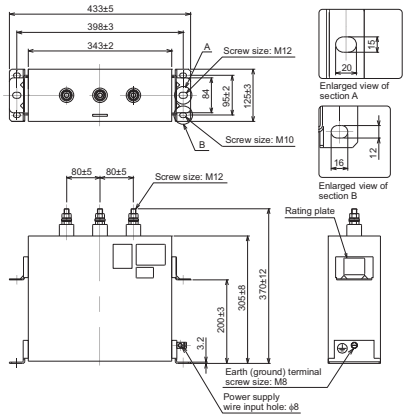

(Unit: mm)
Mass: 20 kg

<<FR-A8MC-H355K, H500K>>

Inrush current limit MC (S-N400 AC200 V 2A2B)

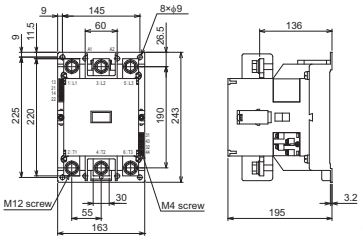

(Unit: mm)
Mass: 9.5 kg

MC power supply stepdown transformer (BKO-CA2571H01)

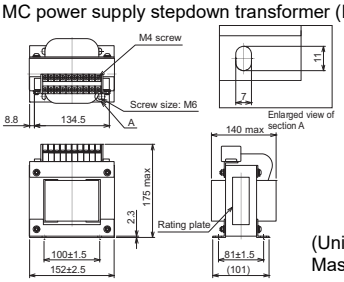

(Unit: mm)
Mass: 9 g

Mini relay terminal block (PYF14T)

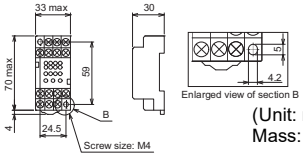

(Unit: mm)
Mass: 53 g

Mini relay (MYQ4Z AC200/220)

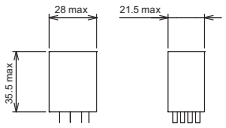

(Unit: mm)
Mass: 35 g

Buffer relay (SR-T5 AC200 V 5 A)

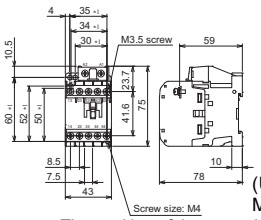

(Unit: mm)
Mass: 0.27 kg

*1 The position of the upper-left mounting hole is selectable. Combinations of the horizontal and vertical dimensions are as follows: 35 and 60, 30 and 60, 34 and 52, 35 and 50 to 52.

Inrush current limit resistor
with thermostat (BKO-CA2573H11)
without thermostat (BKO-CA2573H01)

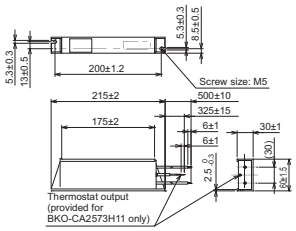

(Unit: mm)
Mass: 0.8 kg

Phase-synchronized bypass switching

Name (model)	Specification and structure
Phase-synchronized bypass switching FR-A8AVP FR-A8VPB-H	The phase-synchronized bypass switching function permits smooth switching of the motor power supply from the inverter output power to the commercial power. The shock caused by the switch is suppressed because the inverter output voltage phase is synchronized with the commercial power voltage phase. Use with a phase detection transformer box (FR-A8VPB-H). • Connection diagram <<Example for the standard model or IP55 compatible model of the FR-A800 series inverter>>

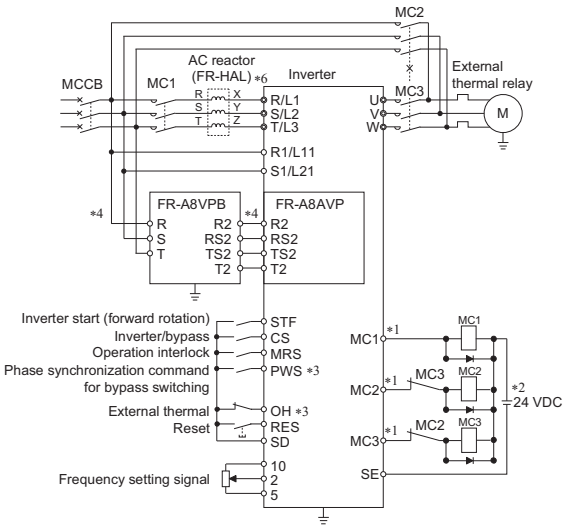

<<Example for the separated converter type of the FR-A800 series inverter>>

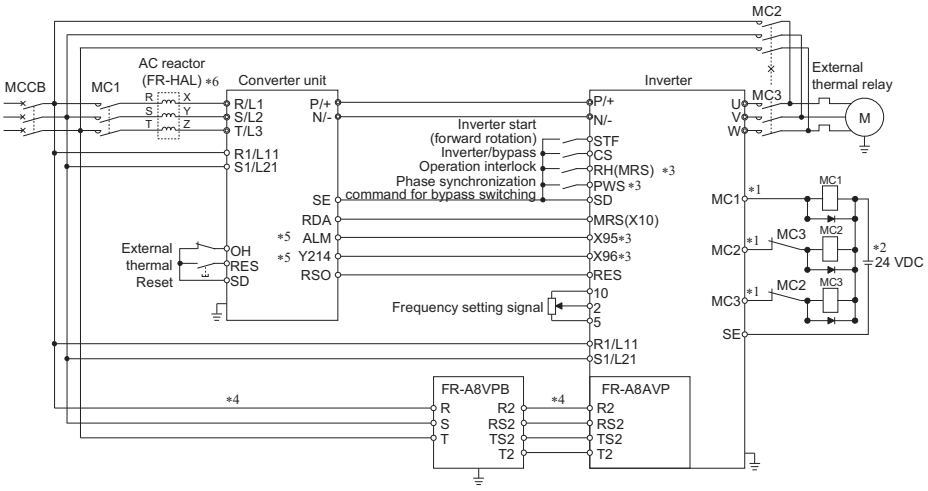

*1 Be careful of the capacity of the sequence output terminals. The applied terminals differ depending on the settings of **Pr.190 to Pr.196** (Output terminal function selection).

Output terminal capacity	Output terminal permissible load
Open collector output of inverter (RUN, SU, IPF, OL, FU)	24 VDC 0.1 A
Inverter relay output (A1-C1, B1-C1, A2-B2, B2-C2) Relay output option (FR-A8AR)	230 VAC 0.3 A 30 VDC 0.3 A

*2 When connecting a DC power supply, insert a protective diode. When connecting an AC power supply, use the relay output option (FR-A8AR), and use contact outputs.

*3 The applied terminals differ depending on the settings of **Pr.180 to Pr.189** (Input terminal function selection).

*4 Use the wires satisfying the following requirements for each wiring location.

Wiring location	Wire gauge (mm^2)	Total wiring length
Wiring between the power supply and the phase detection transformer box	2	10 m or less
Wiring between the phase detection transformer box and the inverter	0.75 to 1.25	5 m or less

*5 To use the signal, assign the function to the output terminal using **Pr.190 to Pr.195** (Output terminal function selection) in the converter unit. Always set the negative logic for the ALM signal.

*6 When using an AC reactor, connect the reactor as specified in the diagram.

Control terminal option

Name (model)	Specification and structure
Screw terminal block FR-A8TR	Replace the standard control circuit terminal block with this option (Not available for the FR-A800-E). • Terminal layout Terminal screw size : M3.5 Tightening torque : 1.2 N·m Recommended cable gauge : 0.75 mm^2 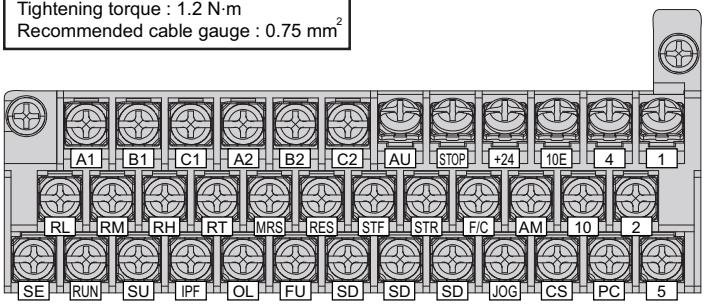 • Restrictions for the FR-A8TR As compared with the standard control circuit terminal block, the FR-A8TR has the following restrictions. (a) When the plug-in option FR-A8NS is used, terminals +24, 10E, 4, STOP, and AU of the FR-A8TR cannot be used. (b) Because the height is restricted, two wires cannot be wired to upper-row terminals (except for terminals A1, B1, C1, A2, B2, and C2) and middle-row terminals on the terminal block. (c) The safety stop function is not available. (d) For the connection to terminal 1, use a screwdriver with a diameter of 4 mm or less. To avoid contact with the front cover fixing area, put the screwdriver upright relative to the terminal screw surface. 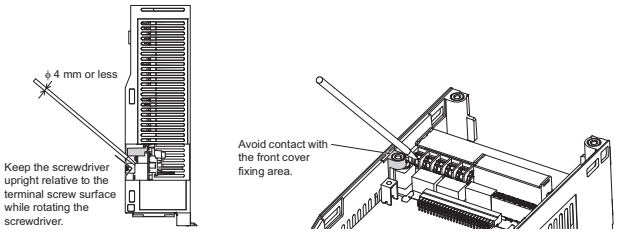 (e) Make sure that the square washers are not turned out of position before tightening screws. 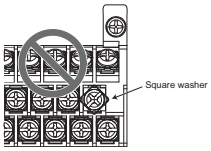

Name (model)	Specification and structure
Vector control terminal block FR-A8TP 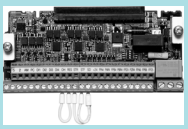	Replace the standard control circuit terminal block with this option. The 24 VDC power supply can be used for the encoder of the SF-V5RU.

• Terminal connection diagrams

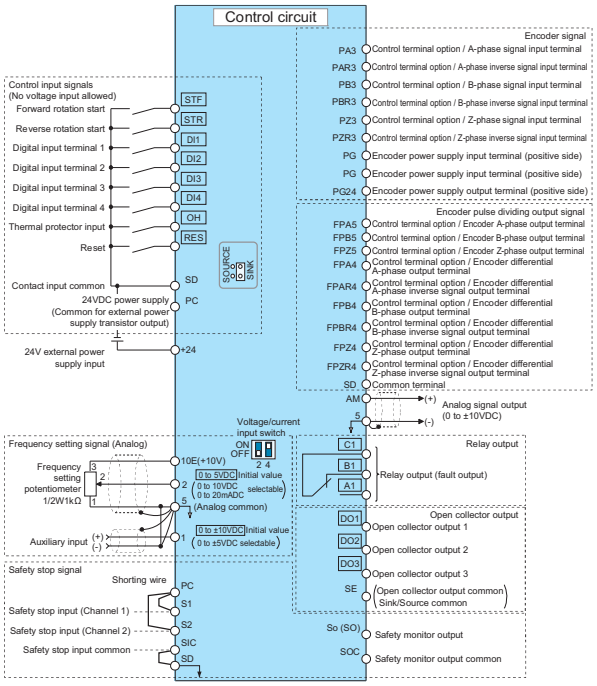

• Control terminal layout

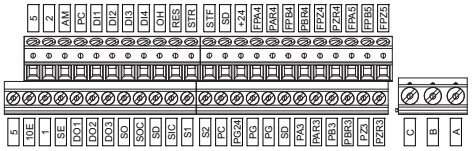

Tightening torque: 0.5 N•m to 0.6 N•m (terminals A, B, and C)
0.22 N•m to 0.25 N•m (terminals other than described above)
Small flat-blade screwdriver (Tip thickness: 0.4 mm / tip width: 2.5 mm)

• Control terminal specification

[Input signal]

Function	Terminal symbol	Terminal name	Terminal function description
Contact input	DI1 to DI4	Digital input terminal 1 to 4	Functions can be assigned to terminals by the input terminal function selection **(Pr.180 to Pr.182, Pr.185)**.
	OH	Thermal protector input	Temperature detector input terminal for overheat protection of a motor. When the OH signal turns OFF, the external thermal relay (E.OHT) protective function is activated Use **Pr.876** to switch valid/invalid status of terminal function. Switches the control logic (sink logic or source logic) independently by the external thermal relay switch (SW5A).
Encoder signal	PA3	Control terminal option / A-phase signal input terminal	A-, B- and Z-phase signals are input from the encoder.
	PAR3	Control terminal option / A-phase inverse signal input terminal	
	PB3	Control terminal option / B-phase signal input terminal	
	PBR3	Control terminal option / B-phase inverse signal input terminal	
	PZ3	Control terminal option / Z-phase signal input terminal	
	PZR3	Control terminal option / Z-phase inverse signal input terminal	
	PG	Encoder power supply terminal (positive side)	Input power for the encoder power supply. Connect the external power supply (5 V, 12 V, 15 V) and the encoder power cable. When the encoder output is the differential line driver type, only 5 V can be input. Make sure the voltage of the external power supply the same as the encoder output voltage. (Check the encoder specification.) Short terminals PG24 and PG for using the 24 VDC power supply of the FR-A8TP.

Name (model)	Specification and structure
Vector control terminal block FR-A8TP 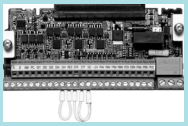	[Output signal]

Function	Terminal symbol	Terminal name	Terminal function description
Open collector	DO1 to DO3	Digital output terminal 1 to 3	The function can be assigned to an output terminal by the output terminal function selection **(Pr.190 to Pr.192)**.
Open collector	SE	Open collector output common	Common terminal for terminals DO1, DO2, DO3. Isolated from terminals SD and 5.
Encoder pulse dividing output	FPA5	Control terminal option / Encoder A-phase output terminal	Outputs A-, B- and Z-phase (home position and mark pulse) signals from the encoder. The A- and B-phase signals can be divided by the ratio (1/n) and output. n=1 to 32767 (an integer) Use **Pr.863 Control terminal option-Encoder pulse division ratio** for division. Common terminal is terminal SD.
Encoder pulse dividing output	FPB5	Control terminal option / Encoder B-phase output terminal	
Encoder pulse dividing output	FPZ5	Control terminal option / Encoder Z-phase output terminal	
Encoder pulse dividing output	FPA4	Control terminal option / Encoder differential A-phase output terminal	Outputs A-, B- and Z-phase (home position and mark pulse) signals from the encoder. The A- and B-phase signals can be divided by the ratio (1/n) and output. n=1 to 32767 (an integer) Use **Pr.863 Control terminal option-Encoder pulse division ratio** for division.
Encoder pulse dividing output	FPAR4	Control terminal option / Encoder differential A-phase inverse signal output terminal	
Encoder pulse dividing output	FPB4	Control terminal option / Encoder differential B-phase output terminal	
Encoder pulse dividing output	FPBR4	Control terminal option / Encoder differential B-phase inverse signal output terminal	
Encoder pulse dividing output	FPZ4	Control terminal option / Encoder differential Z-phase output terminal	
Encoder pulse dividing output	FPZR4	Control terminal option / Encoder differential Z-phase inverse signal output terminal	
Power supply output for encoder	PG24	Encoder power supply terminal (positive side)	Used for the 24 VDC power supply for an encoder. If used, connect this terminal to terminal PG, and this will supply power from terminal PG to the encoder.

Specifications are the same as those of the standard control circuit terminals for the input signals (STF, STR, RES, SD, PC, 10E, 2, 1, 5, and +24) and the output signals (A, B, C, AM, S1, S2, SIC, So (SO), and SOC).

Stand-alone option

Name (model)	Specification and structure

Panel through attachment FR-A8CN[]

With this attachment the heat sink which is the exothermic section of the inverter can be placed on the rear of the enclosure. Since the heat generated in the inverter can be radiated to the rear of the enclosure, the enclosure can be downsized.
The use of this attachment requires more installation area. For installation, refer to the drawing after attachment installation (**page 61**).
For a panel cutting drawing, refer to **page 61**.

• Applicable models

Model	Applicable inverter	
	FR-A820	FR-A840
FR-A8CN01	00105(1.5K), 00167(2.2K), 00250(3.7K)	00023(0.4K), 00038(0.75K), 00052(1.5K), 00083(2.2K), 00126(3.7K)
FR-A8CN02	00340(5.5K), 00490(7.5K)	00170(5.5K), 00250(7.5K)
FR-A8CN03	00630(11K)	00310(11K), 00380(15K)
FR-A8CN04	00770(15K), 00930(18.5K), 01250(22K)	00470(18.5K), 00620(22K)
FR-A8CN05	01540(30K)	00770(30K)
FR-A8CN06	01870(37K), 02330(45K)	00930(37K), 01160(45K), 01800(55K)
FR-A8CN07	03160(55K)	—
FR-A8CN08	03800(75K), 04750(90K)	03250(110K), 03610(132K)
FR-A8CN09	—	02160(75K), 02600(90K)

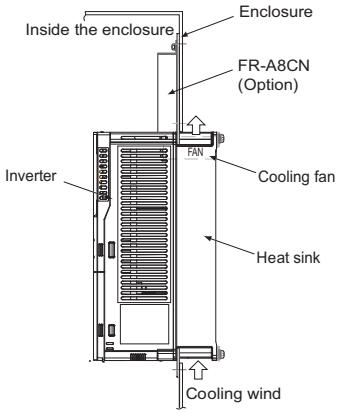

Intercompatibility attachment FR-AAT[] FR-A5AT[]

Enables the FR-A800 inverter to be installed using the mounting holes made for the conventional FR-A700/A500/A200E series inverter.
This attachment is useful for replacing a conventional inverter with the FR-A800 series inverter.
The inverter with this attachment requires greater installation depth.

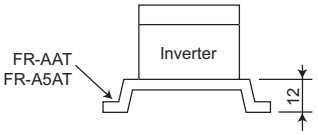

• Models replaceable with FR-A820

		FR-A820							
		0.4K/0.75K	1.5K to 3.7K	5.5K/7.5K	11K	15K to 22K	30K	37K/45K	55K
Conventional model and capacity FR-A220E	0.4K/0.75K	FR-A5AT01	—	—	—	—	—	—	—
	1.5K to 3.7K	FR-A5AT02	FR-A5AT02	—	—	—	—	—	—
	5.5K to 11K	—	FR-A5AT03	FR-A5AT03	○	—	—	—	—
	15K	—	—	FR-AAT02	FR-AAT24	○	—	—	—
	18.5K/22K	—	—	—	FR-A5AT04	FR-A5AT04	—	—	—
	30K	—	—	—	—	FR-AAT27	○	—	—
	37K/45K	—	—	—	—	—	FR-AAT23	○	—
	55K	—	—	—	—	—	—	FR-A5AT05	○
Conventional model and capacity FR-A520/A720	0.4K/0.75K	○	—	—	—	—	—	—	—
	1.5K to 3.7K	FR-AAT21	○	—	—	—	—	—	—
	5.5K/7.5K	—	FR-AAT22	○	—	—	—	—	—
	11K	—	—	FR-A5AT03	○	—	—	—	—
	15K to 22K	—	—	—	FR-AAT24	○	—	—	—
	30K	—	—	—	—	FR-AAT27	○	—	—
	37K/45K	—	—	—	—	—	FR-AAT23	○	—
	55K	—	—	—	—	—	—	FR-A5AT05	○

• Models replaceable with FR-A840

		FR-A840					
		0.4K to 3.7K	5.5K/7.5K	11K/15K	18.5K/22K	30K	37K to 55K
Conventional model and capacity FR-A240E	0.4K to 3.7K	FR-A5AT02	—	—	—	—	—
	5.5K/7.5K	FR-A5AT03	FR-A5AT03	—	—	—	—
	11K/15K	—	FR-AAT02	FR-AAT24	—	—	—
	18.5K/22K	—	—	FR-A5AT04	FR-A5AT04	—	—
	30K	—	—	—	FR-AAT27	○	—
	37K/45K	—	—	—	—	FR-AAT23	○
	55K	—	—	—	—	—	FR-A5AT05
Conventional model and capacity FR-A540	0.4K to 3.7K	○	—	—	—	—	—
	5.5K/7.5K	FR-AAT22	○	—	—	—	—
	11K to 22K	—	FR-AAT02	FR-AAT24	○	—	—
	30K	—	—	—	FR-AAT27	○	—
	37K to 55K	—	—	—	—	FR-AAT23	○
Conventional model and capacity FR-A740	0.4K to 3.7K	○	—	—	—	—	—
	5.5K/7.5K	FR-AAT22	○	—	—	—	—
	11K/15K	—	FR-A5AT03	○	—	—	—
	18.5K/22K	—	—	FR-AAT24	○	—	—
	30K	—	—	—	FR-AAT27	○	—
	37K to 55K	—	—	—	—	FR-AAT23	○

○: Replaceable without the intercompatibility attachment
FR-A5AT[], FR-AAT[]: Replaceable with the intercompatibility attachment.

Name (model)	Specification and structure

Control circuit terminal block intercompatibility attachment FR-A8TAT

This attachment allows the conventional FR-A700/A500 series control circuit terminal blocks to be installed without removing any cables. This attachment is useful for replacing a conventional inverter with the FR-A800 series inverter.

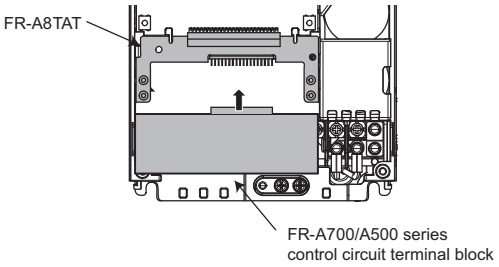

(a) For using the control circuit terminal block of the FR-A500 series, open or remove the cover of the control circuit terminal block. Otherwise, the front cover of the inverter may not close properly.

(b) Since the specifications of the control circuit terminals of the FR-A700/A500 series are different from those of the FR-A800 series, certain functions of the inverter are restricted (refer to the table below).

	Relay output 2 terminals	24 V external power supply input terminal	Safety stop signal terminals
FR-A500 series	×	×	×
FR-A700 series	○	×	×

○ ... Available, ×... Not available

(c) The FR-A8NC, FR-A8NCE, or FR-A8NS plug-in option cannot be installed.

(d) When using a plug-in option, connect the plug-in option using a cable that can be routed through the space between the front cover and the control circuit terminal block (FR-A700 series: 7 mm, FR-A500 series: 0.8 mm).

AC reactor (for power supply coordination) FR-HAL-(H)[]K

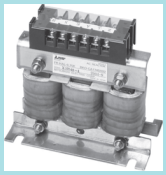

Improves the power factor and reduces the harmonic current at the input side. Connect an AC reactor at the input side of the inverter.

• Selection method

Select an AC reactor according to the applied motor capacity. (Select the AC reactor according to the motor capacity even if the capacity is smaller than the inverter capacity.)

• Connection diagram

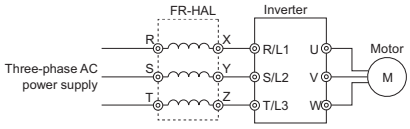

• Outline dimension (Unit: mm)

	Model	W	W1	H	D	D1	d	Mass (kg)
200 V	0.4K	104	84	99	72	40	M5	0.6
	0.75K	104	84	99	74	44	M5	0.8
	1.5K	104	84	99	77	50	M5	1.1
	2.2K	115	40	115	77	57	M6	1.5
	3.7K	115	40	115	83	67	M6	2.2
	5.5K	115	40	115	83	67	M6	2.3
	7.5K	130	50	135	100	86	M6	4.2
	11K	160	75	164	111	92	M6	5.2
	15K	160	75	167	126	107	M6	7.0
	18.5K	160	75	128	175	107	M6	7.1
	22K	185	75	150	158	87	M6	9.0
	30K	185	75	150	168	87	M6	9.7
	37K	210	75	175	174	82	M6	12.9
	45K	210	75	175	191	97	M6	16.4
	55K	210	75	175	201	97	M6	17.4
	75K	240	150	210	215.5	109	M8	23
	110K	330	170	325	259	127	M10	40

	Model	W	W1	H	D	D1	d	Mass (kg)
400 V	H0.4K	135	120	115	64	45	M4	1.5
	H0.75K	135	120	115	64	45	M4	1.5
	H1.5K	135	120	115	64	45	M4	1.5
	H2.2K	135	120	115	64	45	M4	1.5
	H3.7K	135	120	115	74	57	M4	2.5
	H5.5K	160	145	150	76	55	M4	3.5
	H7.5K	160	145	150	96	75	M4	5.0
	H11K	160	145	146	96	75	M4	6.0
	H15K	220	200	195	105	70	M5	9.0
	H18.5K	220	200	212	155	70	M5	9.0
	H22K	220	200	212	155	70	M5	9.5
	H30K	220	200	212	153	75	M5	11
	H37K	220	200	211	160	100	M5	12.5
	H45K	280	255	242	165	80	M6	15
	H55K	280	255	242	170	90	M6	18
	H75K	210	75	170	210.5	105	M6	20
	H110K	240	150	225	220	99	M8	28
	H185K	330	170	325	271	142	M10	55
	H280K	330	170	325	321	192	M10	80
	H355K	330	170	325	346	192	M10	90
	H560K	450	300	540	635	345	M12	190

(a) Approximately 88% of the power factor improving effect can be obtained (92.3% when calculated with 1 power factor for the fundamental wave according to the Architectural Standard Specifications (Electrical Installation) (2013 revision) supervised by the Ministry of Land, Infrastructure, Transport and Tourism of Japan).

(b) This is a sample outline dimension drawing. The shape differs by the model. W1 and D1 indicate distances between installation holes. The installation hole size is indicated by d.

(c) When installing an AC reactor (FR-HAL), install in the orientation shown below.
•(H)55K or lower: Horizontal installation or vertical installation
•(H)75K or higher: Horizontal installation

(d) Keep enough clearance around the reactor because it heats up.
(Keep a clearance of minimum 10cm each on top and bottom and minimum 5cm each on right and left regardless of the installation orientation.)

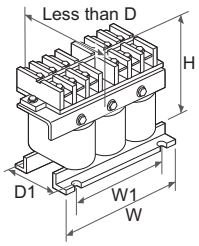

Name (model)	Specification and structure

DC reactor (for power supply coordination) FR-HEL-(H)[]K

Improves the power factor and reduces the harmonic current at the input side. Connect a DC reactor in the DC section of the inverter. Make sure to install this option for the FR-A820-03800(75K) or higher and the FR-A840-02160(75K) or higher. Also install this option when using a motor of 75 kW or higher capacity. (The IP55 compatible model has a built-in DC reactor.)

• Selection method
Select a DC reactor according to the applied motor capacity. (Select it according to the motor capacity even if the capacity is smaller than the inverter capacity.) (Refer to **page 189**.)

• Connection diagram
Connect a DC reactor to the inverter terminals P1 and P. Remove the jumper across terminals P1 and P. If the jumper is left attached, no power factor improvement can be obtained. (The jumper is not installed for the FR-A820-03800(75K) or higher and the FR-A840-02160(75K) or higher.)
The connection cable between the reactor and the inverter should be as short as possible (5m or less).

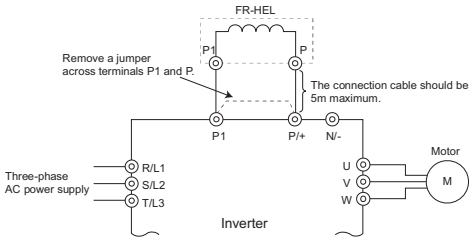

• Outline dimension (Unit: mm)

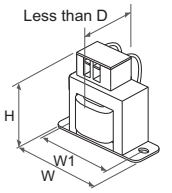

FR-HEL-0.4K to 2.2K
FR-HEL-H0.4K

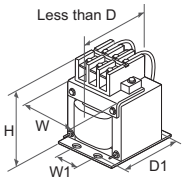

FR-HEL-3.7K to 55K
FR-HEL-H0.75K to H55K

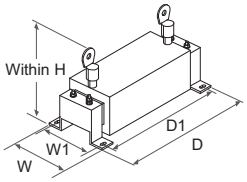

FR-HEL-75K to 110K
FR-HEL-H75K to H355K

	Model	W	W1	W1	D	D1	d	Mass (kg)
200 V	**0.4K**	70	60	71	61	-	M4	0.34
	0.75K	85	74	81	61	-	M4	0.5
	1.5K	85	74	81	70	-	M4	0.7
	2.2K	85	74	81	70	-	M4	0.8
	3.7K	77	55	92	82	56	M4	1.4
	5.5K	77	55	92	92	66	M4	1.7
	7.5K	86	60	122	98	73	M4	2.3
	11K	105	64	138	112	78	M6	3.1
	15K	105	64	142	115	83	M6	3.8
	18.5K	105	64	93	165	93	M6	4.1
	22K	105	64	93	175	103	M6	4.8
	30K	114	72	100	200	100	M6	6.7
	37K	133	86	117	195	97	M6	8.1
	45K	133	86	117	205	107	M6	9.4
	55K	153	126	132	209	121	M6	11.0
	75K	150	130	190	340	310	M6	17
	90K	150	130	200	340	310	M6	19
	110K	175	150	200	400	365	M8	20

	Model	W	W1	W1	D	D1	d	Mass (kg)
400 V	**H0.4K**	90	75	77	60	-	M5	0.6
	H0.75K	66	50	100	70	48	M4	0.85
	H1.5K	66	50	100	80	54	M4	1
	H2.2K	76	50	110	80	54	M4	1.3
	H3.7K	86	55	128	95	69	M4	2.3
	H5.5K	96	60	136	100	75	M5	3
	H7.5K	96	60	136	105	80	M5	3.5
	H11K	105	75	137	110	85	M5	4.5
	H15K	105	75	152	125	95	M5	5
	H18.5K	114	75	162	120	80	M5	5
	H22K	133	90	180	120	75	M5	6
	H30K	133	90	180	120	80	M5	6.5
	H37K	133	90	184	155	100	M5	8.5
	H45K	133	90	184	170	110	M5	10
	H55K	152	105	203	170	106	M6	11.5
	H75K	140	120	185	320	295	M6	16
	H90K	150	130	190	340	310	M6	20
	H110K	150	130	195	340	310	M6	22
	H132K	175	150	200	405	370	M8	26
	H160K	175	150	205	405	370	M8	28
	H185K	175	150	240	405	370	M8	29
	H220K	175	150	240	405	370	M8	30
	H250K	190	165	250	440	400	M8	35
	H280K	190	165	255	440	400	M8	38
	H315K	210	185	250	495	450	M10	42
	H355K	210	185	250	495	450	M10	46

(a) The size of the cables used should be equal to or larger than that of the power supply cables (R/L1, S/L2, T/L3). (Refer to **page 181**)
(b) Approximately 93% of the power factor improving effect can be obtained (94.4% when calculated with 1 power factor for the fundamental wave according to the Architectural Standard Specifications (Electrical Installation) (2010 revision) supervised by the Ministry of Land, Infrastructure, Transport and Tourism of Japan).
(c) This is a sample outline dimension drawing. The shape differs by the model.
W1 and D1 indicate distances between installation holes. The installation hole size is indicated by d.
(d) When installing a DC reactor (FR-HEL), install in the orientation shown below.
•(H)55K or lower: Horizontal installation or vertical installation
•(H)75K or higher: Horizontal installation
(e) Keep enough clearance around the reactor because it heats up.
(Keep a clearance of minimum 10cm each on top and bottom and minimum 5cm each on right and left regardless of the installation orientation.)

Name (model)	Specification and structure

Balance reactor FR-POL-H[]K

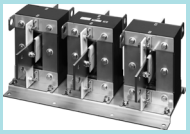

Use this option when the cable length from an inverter to the node point is less than 10 m.

• Selection method

Select a reactor according to the applied motor capacity.

Inverter		Converter unit	Balance reactor	Number of inverters connected in parallel	Capacity of the system	
Model	Multi-rating				Motor capacity (kW)	Output current (A)
FR-A842-400K-P	ND	FR-CC2-H400K-P	FR-POL-H400K	2	630	1232
				3	945	1848
	LD	FR-CC2-H450K-P	FR-POL-H500K	2	710	1386
				3	1065	2078
FR-A842-450K-P	ND	FR-CC2-H450K-P	FR-POL-H500K	2	710	1386
				3	1065	2078
	LD	FR-CC2-H500K-P	FR-POL-H500K	2	800	1539
				3	1200	2309
FR-A842-500K-P	ND	FR-CC2-H500K-P	FR-POL-H500K	2	800	1539
				3	1200	2309
	LD	FR-CC2-H560K-P	FR-POL-H500K	2	900	1750
				3	1350	2626

• Connection diagram

Connect the balance reactor between each inverter and the motor as follows.

Example of parallel connection of two inverters

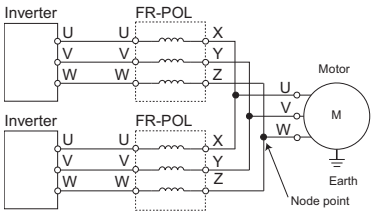

Example of parallel connection of three inverters

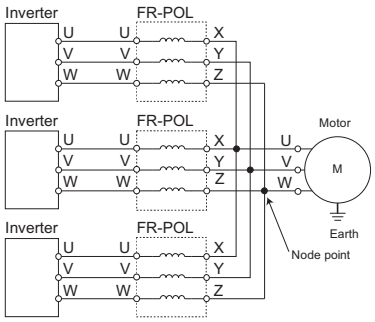

(a) Always connect one balance reactor to each inverter.

(b) FR-POL is usually earthed (grounded) by being mounted securely to the enclosure. If FR-POL is not earthed (grounded) enough through the enclosure, use an earthing (grounding) cable. When using an earthing (grounding) cable, wire the cable to the mounting hole for earthing (grounding) where varnish is removed.

• Outline dimension (Unit: mm)

FR-POL-H400K

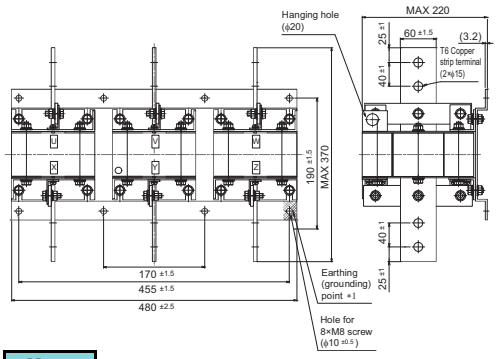

Mass (kg)
58

FR-POL-H500K

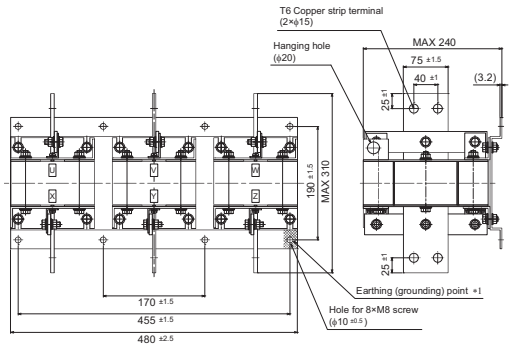

Mass (kg)
61

*1 Use this portion to wire an earthing cable.

Name (model)	Specification and structure

Line noise filter FR-BSF01 (for small capacities) / FR-BLF

Install this option to reduce the electromagnetic noise generated from the inverter. Effective in the range from about 0.5 MHz to 5 MHz. The FR-A820-03160(55K) or lower and FR-A840-01800(55K) or lower are equipped with built-in common mode chokes.

• Outline dimension

FR-BSF01

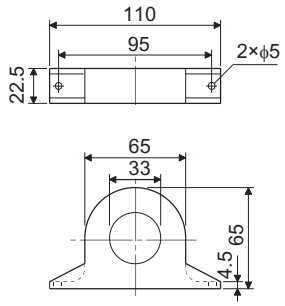

FR-BLF

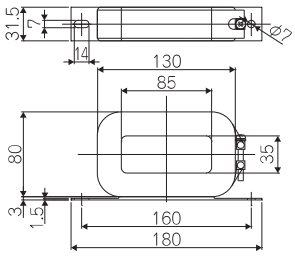

(Unit: mm)

(a) Wind each phase for three times (4T) in the same direction. (The greater the number of turns, the more effective result is obtained.)
When using several line noise filters to make 4T or more, wind the phases (cables) together. Do not use a different line noise filter for different phases.

(b) When the cables are too thick to be winded, run each cable (phase) through four or more filters installed in series in one direction.

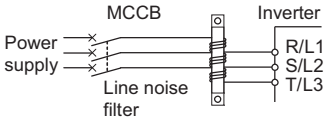

(c) The filter can be used in the same way as the output side. When using filters at the output side, do not wind the cable more than 3 times (4T) for each filter because the filter may overheat.

(d) A thick cable of 38 mm^2 or more is not applicable to the FR-BSF01. Use FR-BLF for a larger diameter cable.

(e) Do not wind the earthing (grounding) cable.

High-duty brake resistor FR-ABR-(H)[]K

Connecting the option improves the regenerative braking capability of the inverter.

• Selection method

Select the model according to the applied inverter capacity.

• Outline dimension

	Model : FR-ABR-[]	Permissible brake duty	Outline dimension (mm) W	W1	D	H	Resistance value (Ω)	Approx mass (kg)
200 V	0.4K	10%	140	500	40	21	200	0.2
	0.75K	10%	215	500	40	21	100	0.4
	2.2K*1	10%	240	500	50	26	60	0.5
	3.7K	10%	215	500	61	33	40	0.8
	5.5K	10%	335	500	61	33	25	1.3
	7.5K	10%	400	500	80	40	20	2.2
	11K	6%	400	700	100	50	13	3.5
	15K*2	6%	300	700	100	50	18 (×1/2)	2.4 (×2)
	22K*3	6%	400	700	100	50	13 (×1/2)	3.3 (×2)

	Model : FR-ABR-[]	Permissible brake duty	Outline dimension (mm) W	W1	D	H	Resistance value (Ω)	Approx mass (kg)
400 V	H0.4K	10%	115	500	40	21	1200	0.2
	H0.75K	10%	140	500	40	21	700	0.2
	H1.5K	10%	215	500	40	21	350	0.4
	H2.2K	10%	240	500	50	26	250	0.5
	H3.7K	10%	215	500	61	33	150	0.8
	H5.5K	10%	335	500	61	33	110	1.3
	H7.5K	10%	400	500	80	40	75	2.2
	H11K	6%	400	700	100	50	52	3.2
	H15K*4	6%	300	700	100	50	18 (×2)	2.4 (×2)
	H22K*5	6%	450	700	100	50	52 (×1/2)	3.3 (×2)

*1 For the 1.5K and 2.2K inverter.

*2 For the 15K brake resistor, configure so that two 18 Ω resistors are connected in parallel.

*3 For the 18.5K and 22K inverter.
For the 22K brake resistor, configure so that two 13 Ω resistors are connected in parallel.

*4 For the H15K brake resistor, configure so that two 18 Ω resistors are connected in series. FR-ABR-15K is indicated on the resistor. (same resistor as the 200 V class 15K)

*5 For the H18.5K and H22K inverter.
For the H22K brake resistor, configure so that two 52 Ω resistors are connected in parallel.

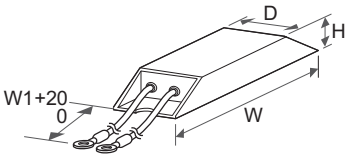

(a) When using the FR-ABR type brake resistor, remove the jumper across terminals PR and PX. Failure to remove will cause the brake resistor to overheat.

(b) The regenerative brake duty setting should be less than permissible brake duty in the table above.

(c) The temperature of the brake resistor becomes 300°C or more depending on the operation frequency, care must be taken for installation and heat dissipation.

(d) MYS type resistor can be also used. Note the permissible brake duty.

(e) Do not remove a jumper across terminals P/+ and P1 except when connecting a DC reactor.

(f) Install a thermal relay to prevent an overheat and burnout of the brake resistor.

Name (model)	Specification and structure

Brake unit
FR-BU2-(H)[]K

Discharging resistor
GZG type
GRZG type

Resistor unit
FR-BR-(H)[]K
MT-BR5-(H)[]K

Provides a braking capability greater than that is provided by an external brake resistor. This option can also be connected to the inverters without built-in brake transistors. Three types of discharging resistors are available. Make a selection according to the required braking torque.

• Specification

[Brake unit]

Model: FR-BU2-[]	200 V						400 V						
	1.5K	3.7K	7.5K	15K	30K	55K	H7.5K	H15K	H30K	H55K	H75K	H220K	H280K
Applicable motor capacity	The applicable capacity differs by the braking torque and the operation rate (%ED).												
Connected brake resistor	GRZG type, FR-BR, MT-BR5 (For the combination, refer to the table below.)											MT-BR5*1	
Multiple (parallel) driving	Max. 10 units (However, the torque is limited by the permissible current of the connected inverter.)												
Approximate mass (kg)	0.9	0.9	0.9	0.9	1.4	2.0	0.9	0.9	1.4	2.0	2.0	13	13

*1 Please contact your sales representative to use a brake resistor other than MT-BR5.

[Resistor unit]

Model: GRZG type *2	200 V				400 V		
	GZG300W-50Ω (1 unit)	GRZG200-10Ω (3 units)	GRZG300-5Ω (4 units)	GRZG400-2Ω (6 units)	GRZG200-10Ω (3 units)	GRZG300-5Ω (4 units)	GRZG400-2Ω (6 units)
Number of connectable units	1 unit	3 in series (1 set)	4 in series (1 set)	6 in series (1 set)	6 in series (2 sets)	8 in series (2 sets)	12 in series (2 sets)
Discharging resistor combined resistance (Ω)	50	30	20	12	60	40	24
Continuous operation permissible power (W)	100	300	600	1200	600	1200	2400

*2 The 1 set contains the number of units in the parentheses. For the 400 V class, 2 sets are required.

Model: FR-BR-[]	200 V			400 V			Model: MT-BR5-[]	200 V	400 V
	15K	30K	55K	H15K	H30K	H55K		55K	H75K
Discharging resistor combined resistance (Ω)	8	4	2	32	16	8	Discharging resistor combined resistance (Ω)	2	6.5
Continuous operation permissible power (W)	990	1990	3910	990	1990	3910	Continuous operation permissible power (W)	5500	7500
Approximate mass (kg)	15	30	70	15	30	70	Approximate mass (kg)	70	65

• Combination between the brake unit and the resistor unit

Brake unit model		Discharging resistor model or resistor unit model			
		GRZG type		FR-BR	MT-BR5
		Model *3	Number of connectable units		
200 V	FR-BU2-1.5K	GZG 300W-50Ω (1 unit)	1 unit	-	-
	FR-BU2-3.7K	GRZG 200-10Ω (3 units)	3 in series (1 set)	-	-
	FR-BU2-7.5K	GRZG 300-5Ω (4 units)	4 in series (1 set)	-	-
	FR-BU2-15K	GRZG 400-2Ω (6 units)	6 in series (1 set)	FR-BR-15K	-
	FR-BU2-30K	-	-	FR-BR-30K	-
	FR-BU2-55K	-	-	FR-BR-55K	MT-BR5-55K
400 V	FR-BU2-H7.5K	GRZG 200-10Ω (3 units)	6 in series (2 sets)	-	-
	FR-BU2-H15K	GRZG 300-5Ω (4 units)	8 in series (2 sets)	FR-BR-H15K	-
	FR-BU2-H30K	GRZG 400-2Ω (6 units)	12 in series (2 sets)	FR-BR-H30K	-
	FR-BU2-H55K	-	-	FR-BR-H55K	-
	FR-BU2-H75K	-	-	-	MT-BR5-H75K
	FR-BU2-H220K	-	-	-	3×MT-BR5-H75K *4
	FR-BU2-H280K	-	-	-	4×MT-BR5-H75K *4

*3 The 1 set contains the number of units in the parentheses. For the 400 V class, 2 sets are required.
*4 The number next to the model name indicates the number of connectable units in parallel.

• Selection method

[GRZG type]

- The maximum temperature rise of the discharging resistors is about 200°C. Use heat-resistant wires to perform wiring, and make sure that they will not come in contact with resistors.
- Do not touch the discharging resistor while the power is ON or for about 10 minutes after the power supply turns OFF. Otherwise you may get an electric shock.

Power supply voltage	Braking torque	Motor capacity								
		0.4	0.75	1.5	2.2	3.7	5.5	7.5	11	15
200 V	50% 30s	FR-BU2-1.5K			FR-BU2-3.7K		FR-BU2-7.5K		FR-BU2-15K	
	100% 30s	FR-BU2-1.5K		FR-BU2-3.7K	FR-BU2-7.5K		FR-BU2-15K		2×FR-BU2-15K *5	
400 V	50% 30s	-*6			FR-BU2-H7.5K				FR-BU2-H15K	
	100% 30s	-*6			FR-BU2-H7.5K		FR-BU2-H15K		FR-BU2-H30K	

Power supply voltage	Braking torque	Motor capacity					
		18.5	22	30	37	45	55
200 V	50% 30s	2×FR-BU2-15K*5			3×FR-BU2-15K*5		4×FR-BU2-15K*5
	100% 30s	3×FR-BU2-15K*5		4×FR-BU2-15K*5	5×FR-BU2-15K*5	6×FR-BU2-15K*5	7×FR-BU2-15K*5
400 V	50% 30s	FR-BU2-H30K			2×FR-BU2-H30K *5		
	100% 30s	2×FR-BU2-H30K*5			3×FR-BU2-H30K *5		4×FR-BU2-H30K*5

*5 The number next to the model name indicates the number of connectable units in parallel.
*6 FR-A840-00052(1.5K) or lower capacity inverters cannot be used with brake units. When using brake units with inverters, use the FR-A840-00083(2.2K) or higher capacity inverters.

Name (model)	Specification and structure

Brake unit
FR-BU2-(H)[]K

Discharging resistor
GZG type
GRZG type

Resistor unit
FR-BR-(H)[]K
MT-BR5-(H)[]K

[FR-BR]
The maximum temperature rise of the resistor unit is about 100°C. Therefore, use heat-resistant wires (such as glass wires).

%ED at short-time rating when braking torque is 100%

Model			Motor capacity									
			5.5kW	7.5kW	11kW	15kW	18.5kW	22kW	30kW	37kW	45kW	55kW
200 V	FR-BU2-15K	%ED	80	40	15	10	-	-	-	-	-	-
	FR-BU2-30K		-	-	65	30	25	15	10	-	-	-
	FR-BU2-55K		-	-	-	-	90	60	30	20	15	10
400 V	FR-BU2-H15K	%ED	80	40	15	10	-	-	-	-	-	-
	FR-BU2-H30K		-	-	65	30	25	15	10	-	-	-
	FR-BU2-H55K		-	-	-	-	90	60	30	20	15	10

Braking torque (%) at 10%ED in short-time rating of 15 s

Model			Motor capacity									
			5.5kW	7.5kW	11kW	15kW	18.5kW	22kW	30kW	37kW	45kW	55kW
200 V	FR-BU2-15K	Braking torque (%)	280	200	120	100	80	70	-	-	-	-
	FR-BU2-30K		-	-	260	180	160	130	100	80	70	-
	FR-BU2-55K		-	-	-	-	300	250	180	150	120	100
400 V	FR-BU2-H15K	Braking torque (%)	280	200	120	100	80	70	-	-	-	-
	FR-BU2-H30K		-	-	260	180	160	130	100	80	70	-
	FR-BU2-H55K		-	-	-	-	300	250	180	150	120	100

Regeneration duty factor (operation frequency)%ED $= \frac{tb}{tc} \times 100$ tb<15s (continuous operation time)

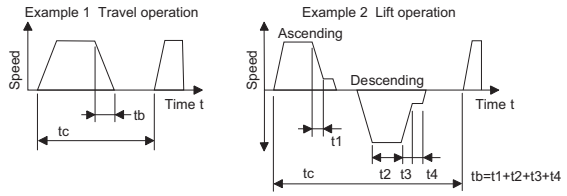

[MT-BR5]
- Be sure to select a well-ventilated place for the installation of the resistor unit. Ventilation is necessary when installing the resistor in a place such as an enclosure, where heat is not well diffused.
- The maximum temperature rise of the resistor unit is about 300°C. When wiring, be careful not to touch the resistor. Also, keep any heat-sensitive component away from the resistor (minimum 40 to 50 cm).
- The temperature of the resistor unit abnormally increases if the brake unit is operated exceeding the specified duty. Since the resistor unit may result in overheat if the temperature of the brake unit is left unchanged, switch off the inverter.
- A resistor unit is equipped with thermostat (NO contact) for overheat protection. If this protective thermostat activates in normal operation, the deceleration time may be too short. Set the inverter's deceleration time longer.

%ED at short-time rating when braking torque is 100%

Number of connectable units*7		Motor capacity															
		75 kW	90 kW	110 kW	132 kW	160 kW	185 kW	220 kW	250 kW	280 kW	315 kW	355 kW	375 kW	400 kW	450 kW	500 kW	560 kW
200 V FR-BU2-55K	1	5	-	-	-	-	-	-	-	-	-	-	-	-	-	-	-
	2	20	15	10	-	-	-	-	-	-	-	-	-	-	-	-	-
400 V FR-BU2-H75K	1	10	5	-	-	-	-	-	-	-	-	-	-	-	-	-	-
	2	40	25	20	10	5	5	-	-	-	-	-	-	-	-	-	-
400 V FR-BU2-H220K	1	80	60	40	25	15	10	10	5	-	-	-	-	-	-	-	-
	2	-	-	-	-	-	-	20	20	15	15	15	10	10	10	5	-
400 V FR-BU2-H280K	1	-	80	65	40	30	20	15	10	10	10	5	-	-	-	-	-
	2	-	-	-	-	-	-	-	-	-	20	20	15	15	15	10	10

Braking torque (%) in short-time rating of 15 s

Number of connectable units*7		Motor capacity															
		75 kW	90 kW	110 kW	132 kW	160 kW	185 kW	220 kW	250 kW	280 kW	315 kW	355 kW	375 kW	400 kW	450 kW	500 kW	560 kW
200 V FR-BU2-55K	1	70	60	50	-	-	-	-	-	-	-	-	-	-	-	-	-
	2	150	120	100	-	-	-	-	-	-	-	-	-	-	-	-	-
400 V FR-BU2-H75K	1	100	80	70	55	45	40	35	30	25	20	20	20	-	-	-	-
	2	150	150	135	110	90	80	70	60	50	45	40	40	-	-	-	-
400 V FR-BU2-H220K	1	200	200	150	150	135	115	100	80	55	-	-	-	-	-	-	-
	2	-	-	-	-	-	-	190	170	150	150	140	120	110	100	90	80
400 V FR-BU2-H280K	1	-	-	200	200	150	150	150	125	100	70	60	-	-	-	-	-
	2	-	-	-	-	-	-	-	-	-	180	160	150	150	130	115	100

*7 The number next to the model name indicates the number of connectable units in parallel.
*8 To obtain a large braking torque, the motor has to have a torque characteristic that meets the braking torque. Check the torque characteristic of the motor.

Name (model)	Specification and structure

Brake unit
FR-BU2-(H)[]K

Discharging resistor
GZG type
GRZG type

Resistor unit
FR-BR-(H)[]K
MT-BR5-(H)[]K

• Connection diagram

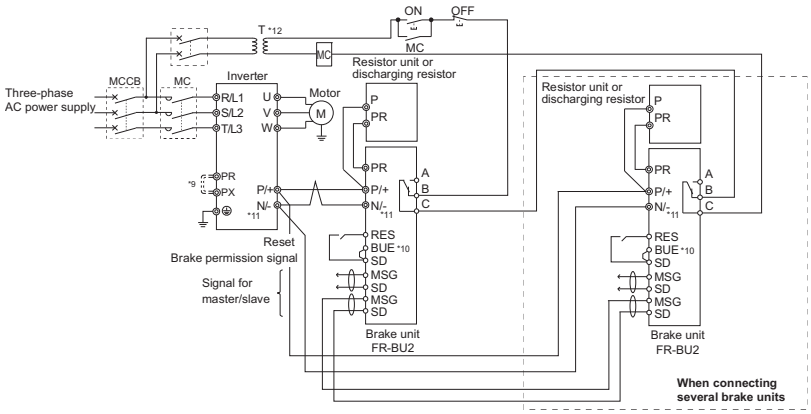

*9 When using the FR-BU2 with the FR-A820-00490(7.5K) or lower and the FR-A840-00250(7.5K) or lower inverters, be sure to remove the jumper across terminals PR and PX.
*10 A jumper is connected across BUE and SD in the initial status.
*11 When wiring, make sure to match the terminal symbol (P/+, N/-) at the inverter side and at the brake unit (FR-BU2) side. Incorrect connection will damage the inverter.
Do not remove the jumper across terminals P/+ and P1 except for connecting the DC reactor.
*12 When the power supply is 400 V class, install a step-down transformer.

• Outline dimensions

<FR-BU2>

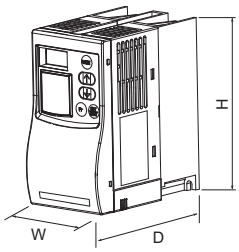

FR-BU2-1.5K to 55K
FR-BU2-H7.5K to H75K

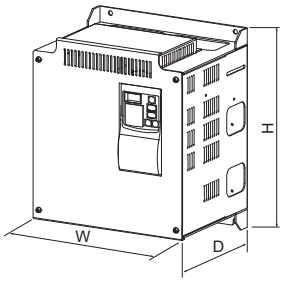

FR-BU2-H220K, H280K

Model	W	H	D
FR-BU2-1.5K to 15K	68	128	132.5
FR-BU2-30K	108	128	129.5
FR-BU2-55K	170	128	142.5
FR-BU2-H7.5K, H15K	68	128	132.5
FR-BU2-H30K	108	128	129.5
FR-BU2-H55K, H75K	170	128	142.5
FR-BU2-H220K, H280K	250	300	200

(Unit: mm)

<GZG, GRZG>

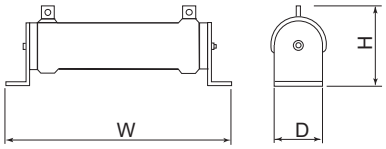

Model	W	H	D
GZG300W	335	78	40
GRZG200	306	53	26
GRZG300	334	79	40
GRZG400	411	79	40

(Unit: mm)

<FR-BR>

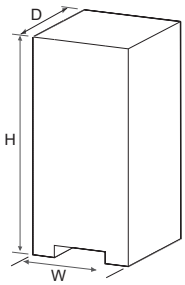

Model	W	H	D
FR-BR-15K	170	450	220
FR-BR-30K	340	600	220
FR-BR-55K	480	700	450
FR-BR-H15K	170	450	220
FR-BR-H30K	340	600	220
FR-BR-H55K	480	700	450

(Unit: mm)

<MT-BR5>

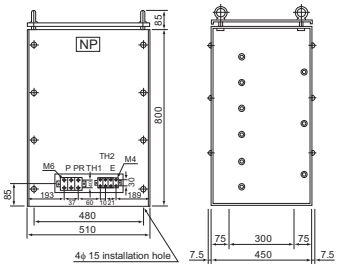

Name (model)	Specification and structure
Multifunction regeneration converter FR-XC **Dedicated stand-alone reactor FR-XCL/FR-XCG** **Dedicated box-type reactor FR-XCB**	One inverter can handle harmonic suppression and power regeneration. Functions that match the application can be selected by combining the inverter/converter with the dedicated reactor FR-XCB (box-type) or FR-XCL/FR-XCG. • Combination

<<Combination matrix in common bus regeneration mode>>

200 V class

Multifunction regeneration converter		Dedicated stand-alone reactor
Model	**Rated surrounding temperature**	**FR-XCL-[ ]K**
FR-XC-7.5K	50°C/40°C rating	7.5
FR-XC-11K		11
FR-XC-15K		15
FR-XC-18.5K-PWM		22
FR-XC-22K		
FR-XC-22K-PWM		30
FR-XC-30K		
FR-XC-37K FR-XC-37K-PWM		37
FR-XC-55K FR-XC-55K-PWM		55

400 V class

Multifunction regeneration converter		Dedicated stand-alone reactor
Model	**Rated surrounding temperature**	**FR-XCL-H[ ]K**
FR-XC-H7.5K	50°C/40°C rating	7.5
FR-XC-H11K		11
FR-XC-H15K		15
FR-XC-H18.5K-PWM		22
FR-XC-H22K		
FR-XC-H22K-PWM		30
FR-XC-H30K		
FR-XC-H37K FR-XC-H37K-PWM		37
FR-XC-H55K FR-XC-H55K-PWM		55
FR-XC-H75K FR-XC-H75K-PWM	50°C rating	75
	40°C rating	90
FR-XC-H110K FR-XC-H110K-PWM	50°C rating	110
	40°C rating	132
FR-XC-H160K FR-XC-H160K-PWM	50°C rating	160
	40°C rating	185
FR-XC-H220K FR-XC-H220K-PWM	50°C rating	220
	40°C rating	250

Multifunction regeneration converter		Dedicated contactor box
Model	**Rated surrounding temperature**	**FR-MCB-H[ ]**
FR-XC-H75K FR-XC-H75K-PWM	50°C rating	150
	40°C rating	
FR-XC-H110K FR-XC-H110K-PWM	50°C rating	400
	40°C rating	
FR-XC-H160K FR-XC-H160K-PWM	50°C rating	400
	40°C rating	
FR-XC-H220K FR-XC-H220K-PWM	50°C rating	400
	40°C rating	800

<<Combination matrix in harmonic suppression mode>>

200 V class

Multifunction regeneration converter		Dedicated box-type reactor
Model	**Rated surrounding temperature**	**FR-XCB-[ ]K**
FR-XC-18.5K-PWM	50°C/40°C rating	18.5
FR-XC-22K		
FR-XC-22K-PWM		22
FR-XC-30K		
FR-XC-37K FR-XC-37K-PWM		37
FR-XC-55K FR-XC-55K-PWM		55

400 V class

Multifunction regeneration converter		Dedicated box-type reactor
Model	**Rated surrounding temperature**	**FR-XCB-H[ ]K**
FR-XC-H18.5K-PWM	50°C/40°C rating	18.5
FR-XC-H22K		
FR-XC-H22K-PWM		22
FR-XC-H30K		
FR-XC-H37K FR-XC-H37K-PWM		37
FR-XC-H55K FR-XC-H55K-PWM		55
FR-XC-H75K FR-XC-H75K-PWM	50°C rating	75
	40°C rating	
FR-XC-H110K FR-XC-H110K-PWM	50°C rating	110
	40°C rating	
FR-XC-H160K FR-XC-H160K-PWM	50°C rating	160
	40°C rating	
FR-XC-H220K FR-XC-H220K-PWM	50°C rating	220
	40°C rating	

Multifunction regeneration converter		Dedicated contactor box
Model	**Rated surrounding temperature**	**FR-MCB-H[ ]**
FR-XC-H75K FR-XC-H75K-PWM	50°C rating	150
	40°C rating	
FR-XC-H110K FR-XC-H110K-PWM	50°C rating	400
	40°C rating	
FR-XC-H160K FR-XC-H160K-PWM	50°C rating	400
	40°C rating	
FR-XC-H220K FR-XC-H220K-PWM	50°C rating	400
	40°C rating	

Name (model)	Specification and structure

Multifunction regeneration converter FR-XC

Dedicated stand-alone reactor FR-XCL/FR-XCG

Dedicated box-type reactor FR-XCB

<<Combination matrix in power regeneration mode 2>>

200 V class

Multifunction regeneration converter		Dedicated stand-alone reactor
Model	Rated surrounding temperature	FR-XCG-[ ]K
FR-XC-7.5K	50°C/40°C rating	7.5
FR-XC-11K		11
FR-XC-15K		15
FR-XC-18.5K-PWM		22
FR-XC-22K		
FR-XC-22K-PWM		30
FR-XC-30K		
FR-XC-37K FR-XC-37K-PWM		37
FR-XC-55K FR-XC-55K-PWM		55

<<Combination matrix for attachment>>

Multifunction regeneration converter	Converter installation attachment for enclosure
Model	FR-XCCP[ ]
FR-XC-7.5K FR-XC-H7.5K	01
FR-XC-11K FR-XC-H11K	
FR-XC-15K FR-XC-H15K	02
FR-XC-22K FR-XC-H22K	03
FR-XC-30K FR-XC-H30K	
FR-XC-18.5K-PWM FR-XC-H18.5K-PWM	
FR-XC-22K-PWM FR-XC-H22K-PWM	

400 V class

Multifunction regeneration converter		Dedicated stand-alone reactor
Model	Rated surrounding temperature	FR-XCG-H[ ]K
FR-XC-H7.5K	50°C/40°C rating	7.5
FR-XC-H11K		11
FR-XC-H15K		15
FR-XC-H18.5K-PWM		22
FR-XC-H22K		
FR-XC-H22K-PWM		30
FR-XC-H30K		
FR-XC-H37K FR-XC-H37K-PWM		37
FR-XC-H55K FR-XC-H55K-PWM		55
FR-XC-H75K FR-XC-H75K-PWM	50°C rating	75
	40°C rating	90
FR-XC-H110K FR-XC-H110K-PWM	50°C rating	110
	40°C rating	132
FR-XC-H160K FR-XC-H160K-PWM	50°C rating	132
	40°C rating	160
FR-XC-H220K FR-XC-H220K-PWM	50°C rating	185
	40°C rating	220

<<Combination matrix for attachment>>

Multifunction regeneration converter	IP20 compatible attachment
Model	FR-XCCU[ ]
FR-XC-37K FR-XC-37K-PWM	01
FR-XC-H55K FR-XC-H55K-PWM	
FR-XC-55K FR-XC-55K-PWM	02
FR-XC-H37K FR-XC-H37K-PWM	03

• Specifications (common bus regeneration mode)

<<200 V class>>

Model			FR-XC-[ ]K*1							FR-XC-[ ]K-PWM*2			
			7.5	11	15	22	30	37	55	18.5	22	37	55
50°C rating	Applicable inverter capacity (kW)		7.5	11	15	22	30	37	55	22	30	37	55
	Applicable motor current (A)		33	46	61	90	115	145	215	90	115	145	215
	Rated input current (A)	Power driving	33	47	63	92	124	151	223	92	124	151	223
		Regenerative driving	26	37	51	74	102	125	186	74	102	125	186
	Continuous rating / overload current rating		100% continuous /150% 60 s										
	Power supply capacity (kVA)*3		17	20	28	41	52	66	100	41	52	66	100
40°C rating	Applicable inverter capacity (kW)		7.5	11	15	22	30	37	55	22	30	37	55
	Applicable motor current (A)		36	50	67	99	127	160	236	99	127	160	236
	Rated input current (A)	Power driving	36	51	69	101	136	166	245	101	136	166	245
		Regenerative driving	28	40	56	81	112	138	204	81	112	138	204
	Continuous rating / overload current rating		100% continuous / 150% 60 s										
	Power supply capacity (kVA)*3		19	22	31	45	57	73	110	45	57	73	110
Power supply	Rated input AC voltage/frequency		Three-phase 200 to 240 V, 50/60 Hz*10										
	Permissible AC voltage fluctuation		Three-phase 170 to 264 V, 50/60 Hz										
	Permissible frequency fluctuation		±5%										
Protective structure			IP00*5							IP00*6			
Cooling system			Forced air										
Number of connectable inverters			10*8										
Approx. mass (kg)*9			5	5	6	10.5	10.5	28	38	10.5	10.5	28	38

Name (model)	Specification and structure
Multifunction regeneration converter FR-XC **Dedicated stand-alone reactor FR-XCL/FR-XCG** **Dedicated box-type reactor FR-XCB**	

<<400 V class>>

Model			FR-XC-H[ ]K*1										
			7.5	11	15	22	30	37	55	75	110	160	220
50°C rating	Applicable inverter capacity (kW)		7.5	11	15	22	30	37	55	75	110	160	220
	Applicable motor current (A)		17	23	31	44	57	71	110	144	216	325	432
	Rated input current (A)	Power driving	18	25	34	49	65	80	118	158	231	331	450
		Regenerative driving	14	20	27	39	54	66	98	135	198	288	396
	Continuous rating / overload current rating		100% continuous / 150% 60 s										
	Power supply capacity (kVA)*4		17	20	28	41	52	66	100	133	195	279	379
40°C rating	Applicable inverter capacity (kW)		7.5	11	15	22	30	37	55	90	132	185	250
	Applicable motor current (A)		18	25	34	48	63	78	120	180	260	361	481
	Rated input current (A)	Power driving	20	27	37	53	72	88	129	189	275	382	515
		Regenerative driving	15	21	29	42	59	72	107	162	238	333	450
	Continuous rating / overload current rating		100% continuous / 150% 60 s										
	Power supply capacity (kVA)*4		19	22	30	44	58	73	110	160	232	322	434
Power supply	Rated input AC voltage/frequency		Three-phase 380 to 500 V, 50/60 Hz*10							Three-phase 380 to 500 V, 50/60 Hz*10*11			
	Permissible AC voltage fluctuation		Three-phase 323 to 550 V, 50/60 Hz										
	Permissible frequency fluctuation		±5%										
Protective structure			IP00*5							Open type IP20 (for IEC 60529 only)*7 (FR-MCB included)			
Cooling system			Forced air										
Number of connectable inverters			10*8										
Approx. mass (kg)*9			5	5	6	10.5	10.5	28	28	45	75	96	96

Model			FR-XC-H[ ]K-PWM*2							
			18.5	22	37	55	75	110	160	220
50°C rating	Applicable inverter capacity (kW)		22	30	37	55	75	110	160	220
	Applicable motor current (A)		44	57	71	110	144	216	325	432
	Rated input current (A)	Power driving	49	65	80	118	158	231	331	450
		Regenerative driving	39	54	66	98	135	198	288	396
	Continuous rating / overload current rating		100% continuous / 150% 60 s							
	Power supply capacity (kVA)*4		41	52	66	100	133	195	279	379
40°C rating	Applicable inverter capacity (kW)		22	30	37	55	90	132	185	250
	Applicable motor current (A)		48	63	78	120	180	260	361	481
	Rated input current (A)	Power driving	53	72	88	129	189	275	382	515
		Regenerative driving	42	59	72	107	162	238	333	450
	Continuous rating / overload current rating		100% continuous / 150% 60 s							
	Power supply capacity (kVA)*4		44	58	73	110	160	232	322	434
Power supply	Rated input AC voltage/frequency		Three-phase 380 to 500 V, 50/60 Hz*10				Three-phase 380 to 500 V, 50/60 Hz*10*11			
	Permissible AC voltage fluctuation		Three-phase 323 to 550 V, 50/60 Hz							
	Permissible frequency fluctuation		±5%							
Protective structure			IP00*6				Open type IP20 (for IEC 60529 only)*7 (FR-MCB included)			
Cooling system			Forced air							
Number of connectable inverters			10*8							
Approx. mass (kg)*9			10.5	10.5	28	28	45	75	96	96

*1 The common bus regeneration mode is selected initially.
*2 The harmonic suppression mode is selected initially.
Set **Pr.416** = "0" to select the common bus regeneration mode.
*3 Selection example for 220 V power supply voltage.
*4 Selection example for 440 V power supply voltage.
*5 IP00 for the FR-XCL.
*6 IP20 for the FR-XCB.
*7 IP00 when the side wiring cover of the FR-XC is removed.
*8 If you want to connect 11 or more inverters, contact your sales representative.
*9 Mass of the FR-XC alone.
*10 The permissible voltage unbalance factor is 3% or less. (Unbalance factor = (| Max line voltage - Mean of three line voltages |) / Mean of three line voltages × 100)
*11 The rated voltage of the FR-MCB is three-phase 380 to 480 V, 50/60 Hz.

Name (model)	Specification and structure
Multifunction regeneration converter FR-XC **Dedicated stand-alone reactor FR-XCL/FR-XCG** **Dedicated box-type reactor FR-XCB**	• Specifications (harmonic suppression mode)

<<200 V class>>

Model			FR-XC-[ ]K*1				FR-XC-[ ]K-PWM*1			
			22	30	37	55	18.5	22	37	55
50°C rating	Applicable inverter capacity (kW)		18.5	22	37	55	18.5	22	37	55
	Applicable motor current (A)		76	90	145	215	76	90	145	215
	Rated input current (A)	Power/ regenerative driving	69	82	134	198	69	82	134	198
	Continuous rating / overload current rating		100% continuous / 150% 60 s				100% continuous / 150% 60 s			
	Power supply capacity (kVA)*2		30	35	57	84	30	35	57	84
40°C rating	Applicable inverter capacity (kW)		18.5	22	37	55	18.5	22	37	55
	Applicable motor current (A)		83	99	160	236	83	99	160	236
	Rated input current (A)	Power/ regenerative driving	75	90	147	217	75	90	147	217
	Continuous rating / overload current rating		100% continuous / 150% 60 s				100% continuous / 150% 60 s			
	Power supply capacity (kVA)*2		32	38	62	92	32	38	62	92
Power supply	Rated input AC voltage/frequency		Three-phase 200 to 230 V, 50/60 Hz*6*11				Three-phase 200 to 230 V, 50/60 Hz*6*11			
	Permissible AC voltage fluctuation		Three-phase 170 to 253 V, 50/60 Hz				Three-phase 170 to 253 V, 50/60 Hz			
	Permissible frequency fluctuation		±5%				±5%			
Input power factor			0.99 or more (when load ratio is 100%)				0.99 or more (when load ratio is 100%)			
Protective structure			IP00*4				IP00*5			
Cooling system			Forced air				Forced air			
Number of connectable inverters			10*8				10*8			
Approx. mass (kg)*9			10.5	10.5	28	28	10.5	10.5	28	38

<<400 V class>>

Model			FR-XC-H[ ]K*1							
			22	30	37	55	75	110	160	220
50°C rating	Applicable inverter capacity (kW)		18.5	22	37	55	75	110	160	220
	Applicable motor current (A)		38	44	71	110	144	216	325	432
	Rated input current (A)	Power/ regenerative driving	37	43	71	104	139	203	290	397
	Continuous rating / overload current rating		100% continuous / 150% 60 s							
	Power supply capacity (kVA)*3		32	37	60	88	118	171	245	334
40°C rating	Applicable inverter capacity (kW)		18.5	22	37	55	90	132	185	250
	Applicable motor current (A)		42	48	78	120	180	260	361	481
	Rated input current (A)	Power/ regenerative driving	40	47	78	113	168	241	335	450
	Continuous rating / overload current rating		100% continuous / 150% 60 s							
	Power supply capacity (kVA)*3		34	40	66	96	142	205	282	379
Power supply	Rated input AC voltage/frequency		Three-phase 380 to 480 V, 50/60 Hz*7*11							
	Permissible AC voltage fluctuation		Three-phase 323 to 506 V, 50/60 Hz							
	Permissible frequency fluctuation		±5%							
Input power factor			0.99 or more (when load ratio is 100%)							
Protective structure			IP00*4				Open type IP20 (for IEC 60529 only)*10 (FR-XCB and FR-MCB included)			
Cooling system			Forced air							
Number of connectable inverters			10*8							
Approx. mass (kg)*9			10.5	10.5	28	28	45	75	96	96

Name (model)	Specification and structure

Multifunction regeneration converter FR-XC

Dedicated stand-alone reactor FR-XCL/FR-XCG

Dedicated box-type reactor FR-XCB

Model			FR-XC-H[ ]K-PWM*1							
			18.5	22	37	55	75	110	160	220
50°C rating	Applicable inverter capacity (kW)		18.5	22	37	55	75	110	160	220
	Applicable motor current (A)		38	44	71	110	144	216	325	432
	Rated input current (A)	Power/ regenerative driving	37	43	71	104	139	203	290	397
	Continuous rating / overload current rating		100% continuous / 150% 60 s							
	Power supply capacity (kVA)*3		32	37	60	88	118	171	245	334
40°C rating	Applicable inverter capacity (kW)		18.5	22	37	55	90	132	185	250
	Applicable motor current (A)		42	48	78	120	180	260	361	481
	Rated input current (A)	Power/ regenerative driving	40	47	78	113	168	241	335	450
	Continuous rating / overload current rating		100% continuous / 150% 60 s							
	Power supply capacity (kVA)*3		34	40	66	96	142	205	282	379
Power supply	Rated input AC voltage/frequency		Three-phase 380 to 480 V, 50/60 Hz*7*11							
	Permissible AC voltage fluctuation		Three-phase 323 to 506 V, 50/60 Hz							
	Permissible frequency fluctuation		±5%							
Input power factor			0.99 or more (when load ratio is 100%)							
Protective structure			IP00*5				Open type IP20 (for IEC 60529 only)*10 (FR-XCB and FR-MCB included)			
Cooling system			Forced air							
Number of connectable inverters			10*8							
Approx. mass (kg)*9			10.5	10.5	28	38	45	75	96	96

*1 For the FR-XC-[]K and FR-XC-H[]K, the common bus regeneration mode is selected initially. For the FR-XC-[]K-PWM and FR-XC-H[]K-PWM, the harmonic suppression mode is selected initially.
*2 Selection example for 220 V power supply voltage.
*3 Selection example for 440 V power supply voltage.
*4 IP00 for the FR-XCL.
*5 IP20 for the FR-XCB.
*6 The DC bus voltage is approx. 297 VDC at an input voltage of 200 VAC, approx. 327 VDC at 220 VAC, and approx. 342 VDC at 230 VAC.
*7 The DC bus voltage is approx. 594 VDC at an input voltage of 400 VAC, approx. 653 VDC at 440 VAC, and approx. 713 VDC at 480 VAC.
*8 If you want to connect 11 or more inverters, contact your sales representative.
*9 Mass of the FR-XC alone.
*10 IP00 when the side wiring cover of the FR-XC is removed.
*11 The permissible voltage unbalance factor is 3% or less. (Unbalance factor = (| Max line voltage - Mean of three line voltages |) / Mean of three line voltages × 100)

Name (model)	Specification and structure
Multifunction regeneration converter FR-XC **Dedicated stand-alone reactor FR-XCL/FR-XCG** **Dedicated box-type reactor FR-XCB** 	• Connection diagram (Common bus regeneration mode) <<55K or lower>> 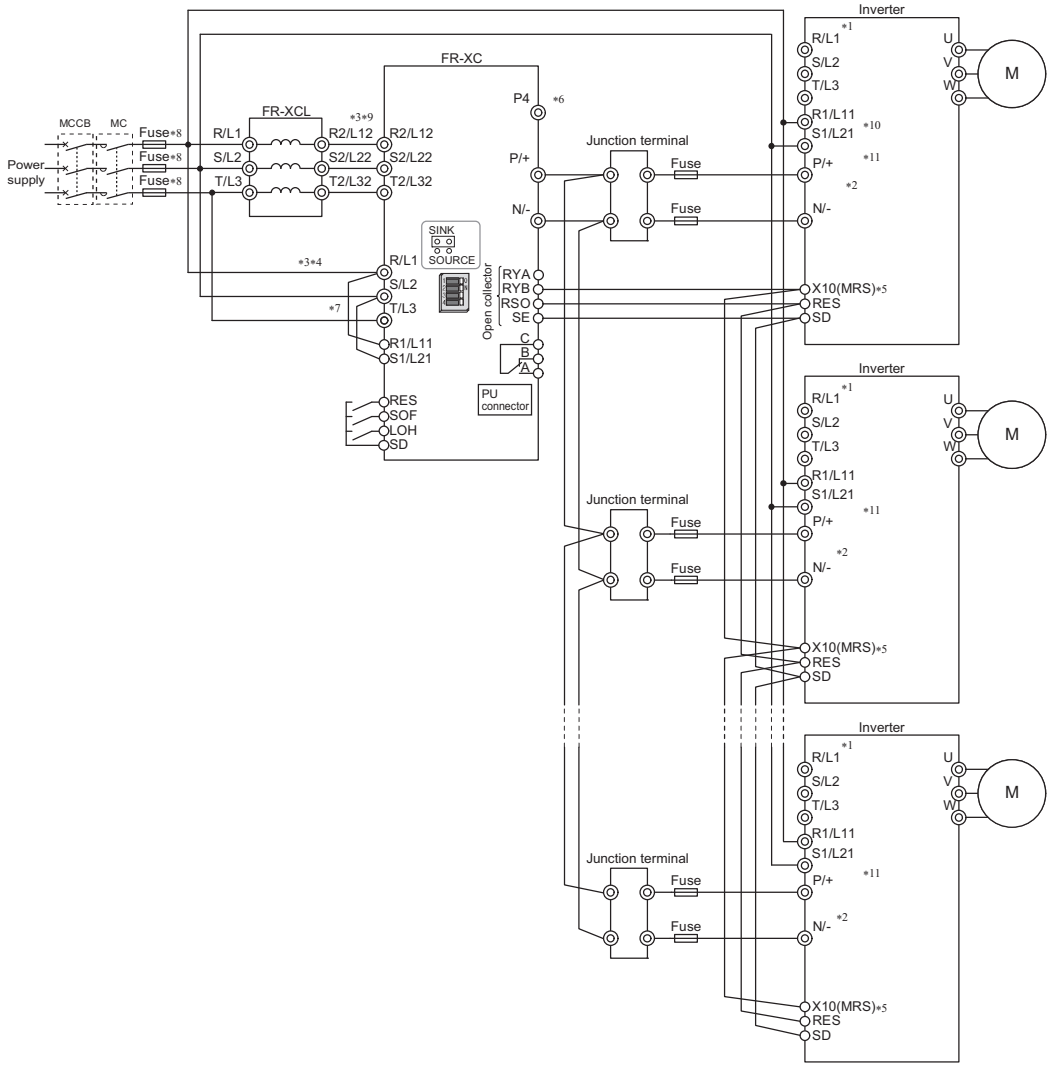 *1 Never connect the power supply to terminals R/L1, S/L2, and T/L3 on the inverter. Incorrect connection will damage the inverter and the converter. *2 Connect between the inverter terminal P/+ and the converter terminal P/+ and between the inverter terminal N/- and the converter terminal N/- for polarity consistency. Connecting opposite polarity of terminals P/+ an N/- will damage the converter and the inverter. *3 Confirm the correct phase sequence of three-phase current to connect between the reactor and the converter, and between the power supply and the converter (terminals R/L1, S/L2, and T/L3). Incorrect connection will damage the converter. *4 Always connect between the power supply and terminals R/L1, S/L2, and T/L3 of the converter. Operating the inverter without connecting them will damage the converter. *5 Use **Pr.178 to Pr.189 (Input terminal function selection)** to assign the X10 signal to a terminal. *6 Do not connect anything to terminal P4. *7 When using a separate power supply for the control circuit, remove each jumper at terminal R1/L11 and terminal S1/L21. *8 Install the UL listed fuse (refer to the FR-XC Instruction Manual) on the input side of the reactor to meet the UL/cUL standards. *9 Do not install an MCCB or MC between the reactor and the converter. Doing so disrupts proper operation. *10 When the inverter has control circuit power supply terminals (R1/L11 and S1/L21), wire them as shown in the diagram. For inverters without terminals R1/L11 and S1/L21, wiring is not required. *11 Instead of connecting the terminals to the AC power supply, the control circuit can be powered by connecting terminal R1/L11 to terminal P/+ and terminal S1/L21 to terminal N/-. 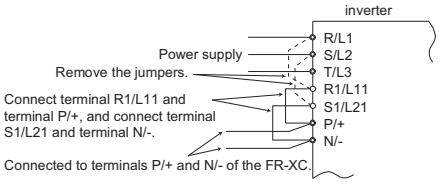

Name (model)	Specification and structure
Multifunction regeneration converter FR-XC **Dedicated stand-alone reactor FR-XCL/FR-XCG** **Dedicated box-type reactor FR-XCB** 	• Connection diagram (Harmonic suppression mode) <<55K or lower>> 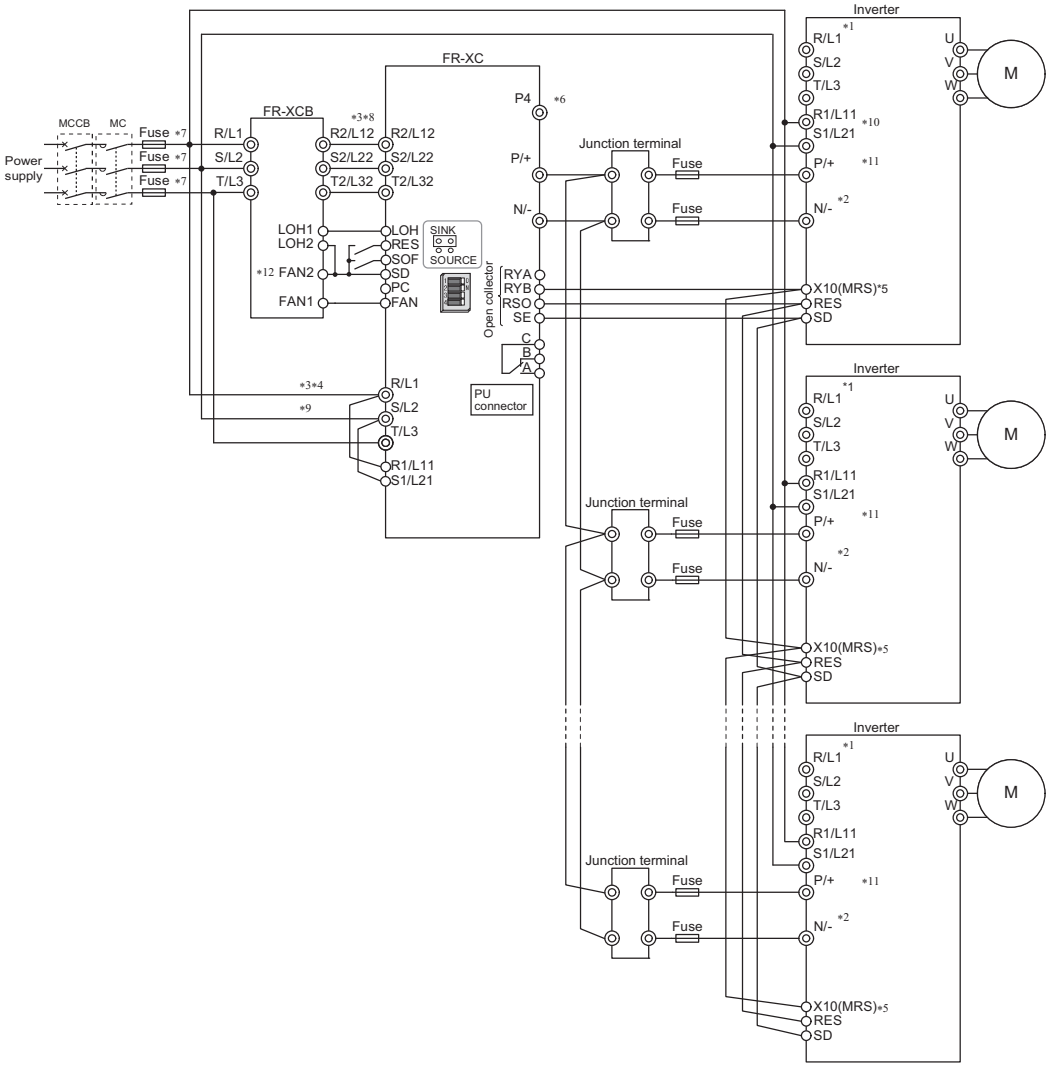 ∗1 Never connect the power supply to terminals R/L1, S/L2, and T/L3 on the inverter. Incorrect connection will damage the inverter and the converter. ∗2 Connect between the inverter terminal P/+ and the converter terminal P/+ and between the inverter terminal N/- and the converter terminal N/- for polarity consistency. Connecting opposite polarity of terminals P/+ and N/- will damage the converter and the inverter. ∗3 Confirm the correct phase sequence of three-phase current to connect between the reactor and the converter, and between the power supply and the converter (terminals R/L1, S/L2, and T/L3). Incorrect connection will damage the converter. ∗4 Always connect between the power supply and terminals R/L1, S/L2, and T/L3 of the converter. Operating the inverter without connecting them will damage the converter. ∗5 Use **Pr.178 to Pr.189 (Input terminal function selection)** to assign the X10 signal to a terminal. ∗6 Do not connect anything to terminal P4. ∗7 Install the UL listed fuse (refer to the FR-XC Instruction Manual) on the input side of the reactor to meet the UL/cUL standards. ∗8 Do not install an MCCB or MC between the reactor and the converter. Doing so disrupts proper operation. ∗9 When using a separate power supply for the control circuit, remove the jumpers connected to terminals R1/L11 and S1/L21. ∗10 When the inverter has control circuit power supply terminals (R1/L11 and S1/L21), wire them as shown in the diagram. For inverters without terminals R1/L11 and S1/L21, wiring is not required. ∗11 Instead of connecting the terminals to the AC power supply, the control circuit can be powered by connecting terminal R1/L11 to terminal P/+ and terminal S1/L21 to terminal N/-. In this case, do not connect the terminals to the AC power supply. Doing so will damage the inverter. 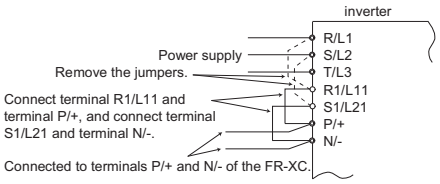 ∗12 The terminal symbols differ depending on the manufacture year and month of the FR-XCB. (Refer to the FR-XC Instruction Manual.)

Name (model)	Specification and structure
Multifunction regeneration converter FR-XC **Dedicated stand-alone reactor FR-XCL/FR-XCG** **Dedicated box-type reactor FR-XCB**	

• Outline dimension drawings
This is an example of the outer appearance, which differs depending on the model.
<<Multifunction regeneration converter FR-XC (-PWM)>>

•FR-XC-(H)7.5K, (H)11K, (H)15K

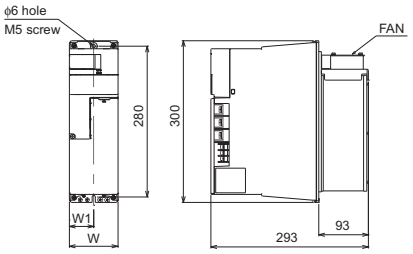

(Unit: mm)

Model	W	W1
FR-XC-(H)7.5K, (H)11K	90	45
FR-XC-(H)15K	120	60

•FR-XC-(H)22K, (H)30K
•FR-XC-(H)18.5K-PWM, (H)22K-PWM

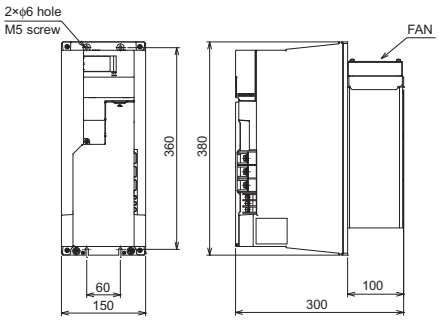

(Unit: mm)

•FR-XC-(H)37K, (H)55K
•FR-XC-(H)37K-PWM, (H)55K-PWM

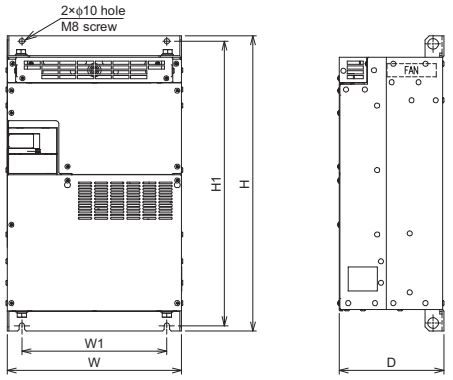

(Unit: mm)

Model	W	W1	H	H1	D
FR-XC-(H)37K, H55K FR-XC-(H)37K-PWM, H55K-PWM	325	270	550	530	195
FR-XC-55K FR-XC-55K-PWM	370	300	620	600	250

•FR-XC-H75K
•FR-XC-H75K-PWM

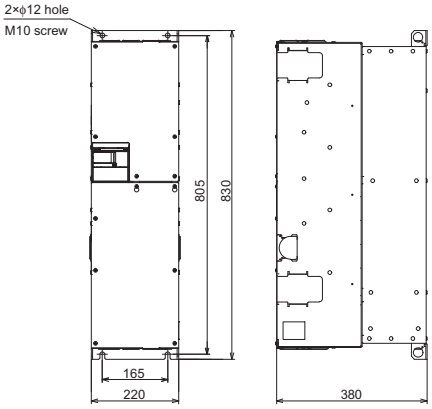

(Unit: mm)

•FR-XC-H110K
•FR-XC-H110K-PWM

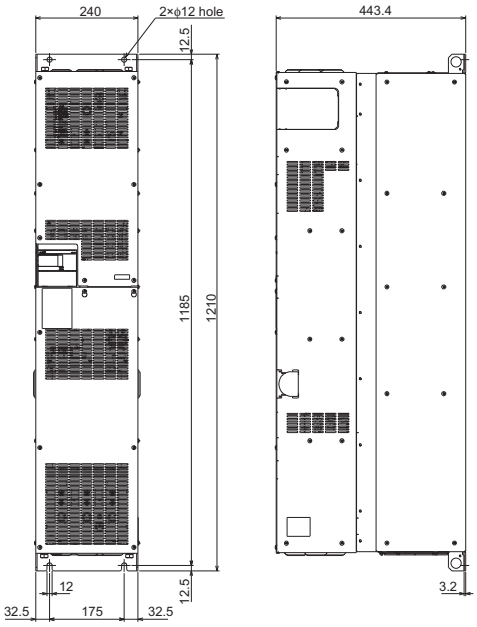

(Unit: mm)

•FR-XC-H160K, H220K
•FR-XC-H160K-PWM, H220K-PWM

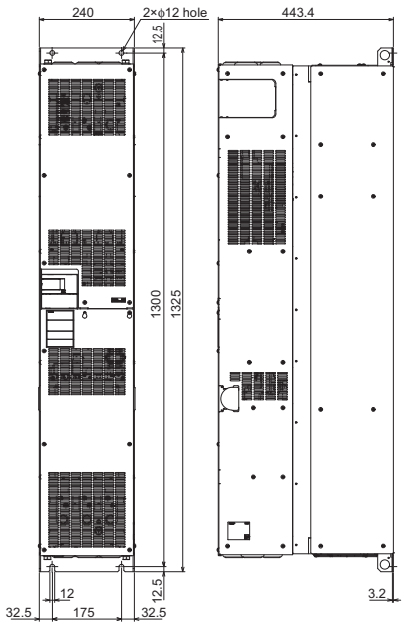

(Unit: mm)

Name (model)	Specification and structure
Multifunction regeneration converter FR-XC **Dedicated stand-alone reactor FR-XCL/FR-XCG** **Dedicated box-type reactor FR-XCB**	

<<Dedicated stand-alone reactor FR-XCL>>

•FR-XCL-(H)7.5K, (H)11K, (H)15K, (H)22K, (H)30K, (H)37K, (H)55K, H75K, H90K

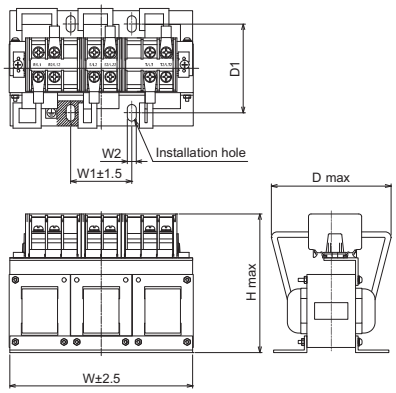

•FR-XCL-H110K, H132K, H160K, H185K, H220K, H250K

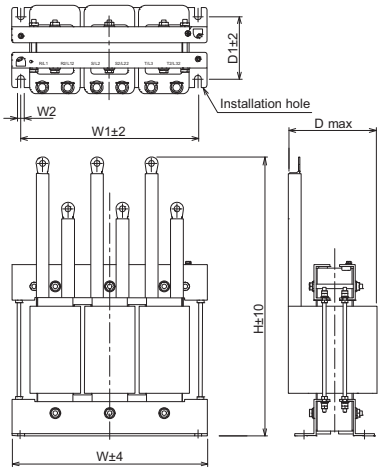

200 V class (Unit: mm)

Model	W	W1	W2	H	D	D1	Mounting screw size	Terminal screw size	Mass
FR-XCL-7.5K	165	55	8	125	120	80±2	M6	M5	3.9kg
FR-XCL-11K						73±2			3.6kg
FR-XCL-15K	192			130	130	100±2		M6	5.5kg
FR-XCL-22K					140	110±2			6.3kg
FR-XCL-30K	240	70		150	160	119±2			10.0kg
FR-XCL-37K	248	200	10	190	240	120±5	M8	M10	12.0kg
FR-XCL-55K	250	225			260	135±5			15.5kg

400 V class (Unit: mm)

Model	W	W1	W2	H	D	D1	Mounting screw size	Terminal screw size	Mass
FR-XCL-H7.5K	165	55	8	125	120	73±2	M6	M5	3.7kg
FR-XCL-H11K						80±2			4.2kg
FR-XCL-H15K					135	110±2			6.0kg
FR-XCL-H22K	240	70		150	150	109±2		M6	9.0kg
FR-XCL-H30K					170	129±2			12.0kg
FR-XCL-H37K	220	200	10	190	230	120±5	M8	M8	12.0kg
FR-XCL-H55K	250	225				135±5			16.0kg
FR-XCL-H75K	300	270		335	200	140±2			50.0kg
FR-XCL-H90K				360	210	150±2			60.0kg
FR-XCL-H110K	430	390	15	510	195	138	M12	M12	74.0kg
FR-XCL-H132K				520					79.0kg
FR-XCL-H160K				600	190	140			95.0kg
FR-XCL-H185K					210	160			115.0kg
FR-XCL-H220K	500	460		640					150.0kg
FR-XCL-H250K				660					160.0kg

<<Dedicated stand-alone reactor FR-XCG>>

•FR-XCG-(H)7.5K, (H)11K, (H)15K, (H)22K, (H)30K, (H)37K, (H)55K, H75K, H90K

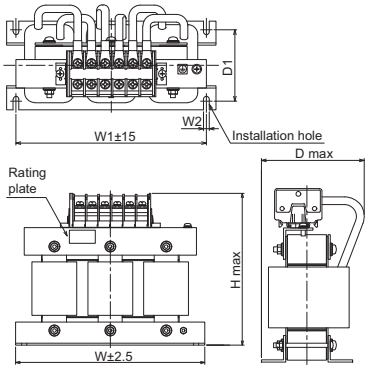

•FR-XCG-H110K, H132K, H160K, H185K, H220K

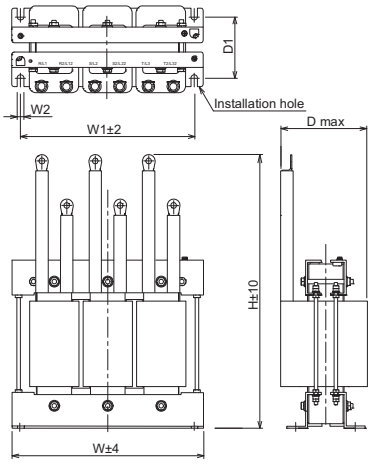

200 V class (Unit: mm)

Model	W	W1	W2	H	D	D1	Mounting screw size	Terminal screw size	Mass
FR-XCG-7.5K	220	200	6	185	115	60±1.5	M5	M5	5kg
FR-XCG-11K					120	75±1.5			8kg
FR-XCG-15K				190	130	90±1.5		M6	11kg
FR-XCG-22K	255	225	8	240	140	85±1.5	M6		16kg
FR-XCG-30K					155	100±1.5			20kg
FR-XCG-37K	300	270	10	285	180		M8	M10	25kg
FR-XCG-55K					190	130±1.5			40kg

400 V class (Unit: mm)

Model	W	W1	W2	H	D	D1	Mounting screw size	Terminal screw size	Mass
FR-XCG-H7.5K	220	200	6	185	115	60±1.5	M5	M5	5kg
FR-XCG-H11K					120	75±1.5			8kg
FR-XCG-H15K					130	90±1.5			11kg
FR-XCG-H22K	255	225	8	240		85±1.5	M6	M6	16kg
FR-XCG-H30K					140	100±1.5			20kg
FR-XCG-H37K	300	270	10	285	180		M8	M8	25kg
FR-XCG-H55K					190	130±1.5			40kg
FR-XCG-H75K				335	200	140±2			50kg
FR-XCG-H90K				360	210	150±2			60kg
FR-XCG-H110K	430	390	15	510	195	138±2	M12	M12	72.0kg
FR-XCG-H132K				560		140±2			80.0kg
FR-XCG-H160K				600	190				95.0kg
FR-XCG-H185K					210	160±2			115.0kg
FR-XCG-H220K	500	460		650					150.0kg

Name (model)	Specification and structure

Multifunction regeneration converter FR-XC

Dedicated stand-alone reactor FR-XCL/FR-XCG

Dedicated box-type reactor FR-XCB

<<Dedicated box-type reactor FR-XCB>>

FR-XCB-(H)55K or less

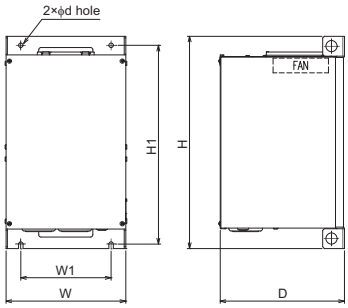

FR-XCB-H75K

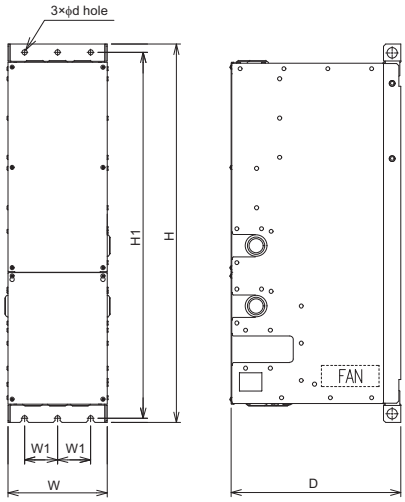

200 V class (Unit: mm)

Model	W	W1	H	H1	D	d	Screw size	Mass
FR-XCB-18.5K	265	200	470	440	275	10	M8	26.0kg
FR-XCB-22K								
FR-XCB-37K	350	270	600	575	330	12	M10	56.9kg
FR-XCB-55K								68.5kg

400 V class (Unit: mm)

Model	W	W1	H	H1	D	d	Screw size	Mass
FR-XCB-H18.5K	265	200	470	440	275	10	M8	26.9kg
FR-XCB-H22K								
FR-XCB-H37K	350	270	600	575	330	12	M10	63.0kg
FR-XCB-H55K								73.0kg
FR-XCB-H75K	240	80	915	885	410	12	M10	120.0kg

FR-XCB-H110K

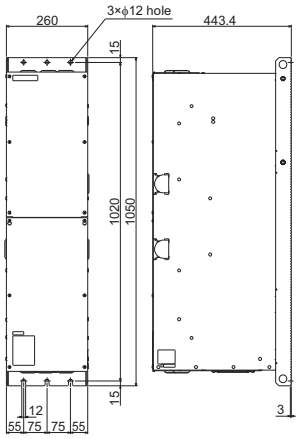

(Unit: mm)

Model	Mass
FR-XCB-H110K	164.0kg

FR-XCB-H160K, H220K

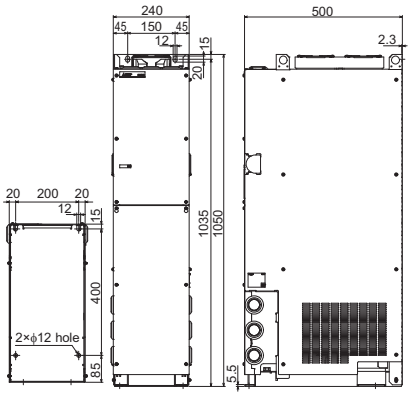

(Unit: mm)

Model	Mass
FR-XCB-H160K	230.0kg
FR-XCB-H220K	260.0kg

Name (model)	Specification and structure
Multifunction regeneration converter FR-XC **Dedicated stand-alone reactor FR-XCL/FR-XCG** **Dedicated box-type reactor FR-XCB** 	<<Dedicated contactor box FR-MCB>> 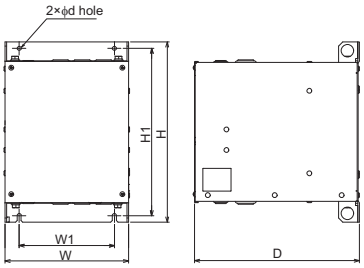 (Unit: mm) **Model** / **W** / **W1** / **H** / **H1** / **D** / **d** / **Screw size** / **Mass** **FR-MCB-H150** / 240 / 185 / 350 / 325 / 320 / 8 / M6 / 17.0kg **FR-MCB-H400** / 175 / 540 / 518 / 370 / 10 / 29.0kg **FR-MCB-H800** / 880 / 858 / 51.0kg <<Converter installation enclosure attachment FR-XCCP>> 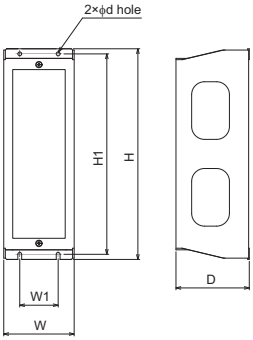 (Unit: mm) **Model** / **W** / **W1** / **H** / **H1** / **D** / **d** / **Screw size** **FR-XCCP01** / 110 / 60 / 330 / 314 / 115 / 6 / M5 **FR-XCCP02** / 130 / 90 / 120 **FR-XCCP03** / 160 / 120 / 410 / 396 / 116 / 7 / M6

Name (model)	Specification and structure

High power factor converter FR-HC2- (H)[]K

Substantially suppresses power harmonics to obtain the equivalent capacity conversion coefficient K5 = 0 specified in "the Harmonic Suppression Guidelines for Consumers Who Receive High Voltage or Special High Voltage" in Japan.
The power regeneration function comes standard.
The common converter driving with several inverters is possible.

• Selection method
Select the model according to capacity of the inverter or the applicable motor, whichever larger.

• Specifications

Model: FR-HC2-[] *2	200 V					400 V										
	7.5K	15K	30K	55K	75K	H7.5K	H15K	H30K	H55K	H75K	H110K	H160K	H220K	H280K	H400K	H560K
Applicable inverter capacity (ND rating)*1	3.7K to 7.5K	7.5K to 15K	15K to 30K	30K to 55K	37K to 75K	3.7K to 7.5K	7.5K to 15K	15K to 30K	30K to 55K	37K to 75K	55K to 110K	90K to 160K	110K to 220K	160K to 280K	200K to 400K	280K to 560K
Rated input voltage/ frequency	Three-phase 200 V to 220 V 50 Hz 200 V to 230 V 60 Hz					Three-phase 380 V to 460 V 50/60 Hz										
Rated input current (A)	33	61	115	215	278	17	31	57	110	139	203	290	397	506	716	993

*1 The total capacity of the connected inverters.
*2 If a high power factor converter (FR-HC2) is purchased, it comes with reactor 1 (FR-HCL21), reactor 2 (FR-HCL22), and an outside box (FR-HCB2). Do not connect the DC reactor to the inverter when using a high power factor converter.
(If an H280K or higher is purchased, it comes with FR-HCL21, FR-HCL22, FR-HCC2, FR-HCR2, and FR-HCM2.)

• Outline dimension (Unit: mm)

Voltage	Capacity	High power factor converter FR-HC2			Reactor 1 FR-HCL21*3			Reactor 2 FR-HCL22*3			Outside box FR-HCB2*4		
		W	H	D	W	H	D	W	H	D	W	H	D
200 V	7.5K	220	260	170	132	150	100	237.5	230	140	190	320	165
	15K	250	400	190	162	172	126	257.5	260	165			
	30K	325	550	195	195	210	150	342.5	305	180	270	450	203
	55K	370	620	250	210	180	200.5	432.5	380	280			
	75K	465	620	300	240	215	215.5	474	460	280	400	450	250
400 V	H7.5K	220	300	190	132	140	100	237.5	220	140	190	320	165
	H15K	220	300	190	162	170	126	257.5	260	165			
	H30K	325	550	195	182	195	101	342.5	300	180			
	H55K	370	670	250	282.5	245	165	392.5	365	200	270	450	203
	H75K	325	620	250	210	175	210.5	430	395	280	300	350	250
	H110K	465	620	300	240	230	220	500	440	370	350	450	380
	H160K	498	1010	380	280	295	274.5	560	520	430	400	450	440
	H220K	498	1010	380	330	335	289.5	620	620	480			
	H280K	680	1010	380	330	335	321	690	700	560	-	-	-
	H400K	790	1330	440	402	460	550	632	675	705	-	-	-
	H560K	790	1330	440	452	545	645	632	720	745	-	-	-

High power factor converter

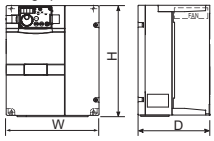

Reactor 1, Reactor 2

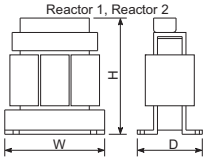

Outside box

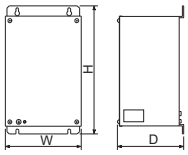

*3 Install reactors (FR-HCL21 and 22) on a horizontal surface.
*4 The H280K or higher are not equipped with FR-HCB2. A filter capacitor and inrush current limit resistors are provided instead.

Name (model)	Specification and structure
Surge voltage suppression filter FR-ASF-H[]K	A surge voltage suppression filter limits surge voltage applied to motor terminals when driving the 400 V class motor by the inverter.

• Selection method

Select the model according to the applied motor capacity.

• Specifications

Model: FR-ASF-[]		400 V						
		H1.5K	H3.7K	H7.5K	H15K	H22K	H37K	H55K
Applicable motor capacity (kW)		0.4 to 1.5	2.2 to 3.7	5.5 to 7.5	11 to 15	18.5 to 22	30 to 37	45 to 55
Rated input current (A)		4.0	9.0	17.0	31.0	43.0	71.0	110.0
Overload current rating *1		150% 60 s, 200% 0.5 s						
Rated input AC voltage *1		Three-phase 380 V to 460 V 50 Hz/60 Hz						
Maximum AC voltage fluctuation *1		Three-phase 506 V 50 Hz/60 Hz						
Maximum frequency *1		400 Hz						
PWM frequency permissible range		0.5 kHz to 14.5 kHz						
Maximum wiring length between the filter and the motor		300 m						
Approx. mass (kg)		8.0	11.0	20.0	28.0	38.0	59.0	78.0
Environment	Surrounding air temperature	-10°C to +50°C (non-freezing)						
	Surrounding air humidity	90% RH or less (non-condensing)						
	Atmosphere	Indoors (without corrosive gas, flammable gas, oil mist, dust and dirt, etc.)						
	Altitude/vibration	Maximum 1000 m, 5.9 m/s^2 or less at 10 to 55 Hz (directions of X, Y, Z axes)						

*1 Determined by the specification of the connected inverter (400 V class).

• Connection diagram

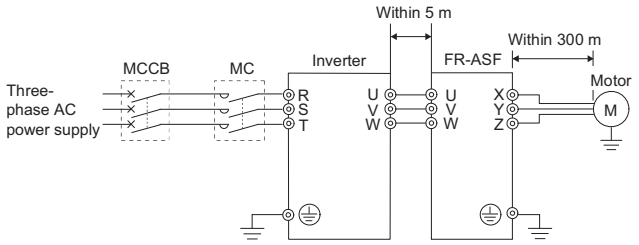

• Outline dimension (Unit: mm)

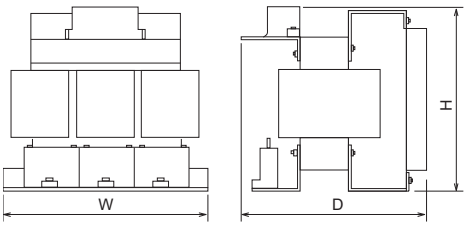

Model	W*1	H*1	D*1
FR-ASF-H1.5K	221	193	160
FR-ASF-H3.7K	221	200	180
FR-ASF-H7.5K	281	250	215
FR-ASF-H15K *2	336	265	290
FR-ASF-H22K *2	336	345	354
FR-ASF-H37K *2	376	464	429
FR-ASF-H55K *2	396	464	594

*1 This indicates the maximum dimension.
*2 The H15K or higher has a different shape.

Name (model)	Specification and structure
Surge voltage suppression filter FR-BMF-H[]K	Limits surge voltage applied to motor terminals when driving a 400 V class motor with an inverter. This filter is compatible with the 5.5 to 37 kW motors. • Selection method Select the model according to the applied motor capacity. • Specifications

Model: FR-BMF-H[]K		7.5		15		22		37	
Applicable motor capacity (kW) *1		5.5	7.5	11	15	18.5	22	30	37
Rated current (A)		17		31		43		71	
Overload current rating*2		150% 60 s, 200% 0.5 s (inverse-time characteristics)							
Rated AC input voltage*2		Three-phase 380 to 480 V							
Permissible AC voltage fluctuation*2		323 to 528 V							
Maximum frequency*2		120 Hz							
PWM carrier frequency		2 kHz or lower*3							
Protective structure (JEM 1030)		Open type (IP00)							
Cooling system		Self-cooling							
Maximum wiring length		100m or lower							
Approx. mass (kg)		5.5		9.5		11.5		19	
Environment	Surrounding air temperature	-10°C to +50°C (non-freezing)							
	Surrounding air humidity	90% RH or less (non-condensing)							
	Atmosphere	Indoors (without corrosive gas, flammable gas, oil mist, dust and dirt, etc.)							
	Altitude/vibration	Maximum 1000 m, 5.9 m/s^2 or less*4 at 10 to 55 Hz (directions of X, Y, Z axes)							

*1 Indicates the maximum capacity applicable with the Mitsubishi Electric 4-pole standard motor. (PM motors are not applicable.)
*2 Determined by the specification of the connected inverter (400 V class).
*3 Set **Pr.72 PWM frequency selection** to 2 kHz or less.
*4 When an inverter has a filter mounted on its back, do not use such an inverter on a moving object or in a place that vibrates (exceeding 1.96 m/s^2).

• Connection diagram

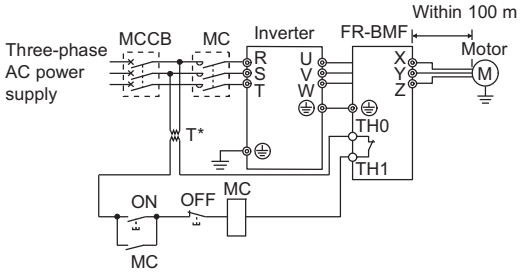

* Install a step-down transformer.

• Outline dimension

FR-BMF-H7.5K

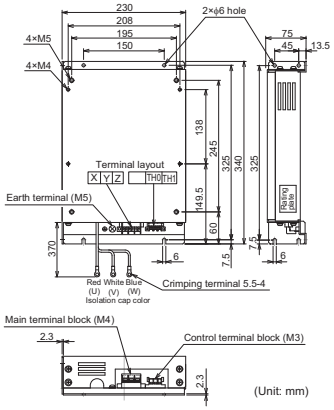

FR-BMF-H15K, H22K

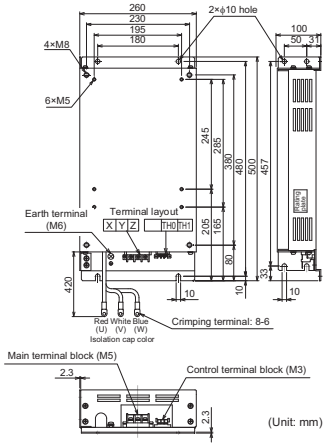

FR-BMF-H37K

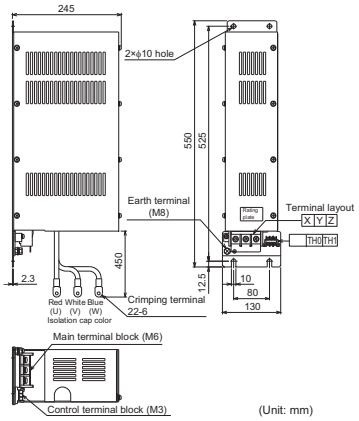

Name (model)	Specification and structure
Sine wave filter **MT-BSL-(H)[]K** **MT-BSC-(H)[]K**	

• Sine wave filter application

A sine wave filter can be installed to adjust the motor voltage and current waveforms to be sine waves. Install a sine wave filter to the output side of the inverter . This filter is compatible with the FR-A820-03800(75K) or higher, the FR-A840-02160(75K) or higher, and a 75 kW or higher motor.

(This product is available only with general-purpose motors.) A sine wave filter will bring operation characteristic equivalent to the operation with a sine wave power supply and also will provide the following benefits.

(a) Low noise
(b) No surge current
(c) Small motor losses (for a standard motor)

• Operating condition

The following settings and conditions are required to use a sine wave filter.

(a) Set "25" in **Pr.72**. (The initial value is "2".)
This setting changes the carrier frequency to 2.5 kHz. (A sine wave filter is designed on the assumption of 2.5 kHz carrier frequency. Always change this setting.) The operation without setting **Pr.72** = "25" may damage inverter and the sine wave filter.
(b) A sine wave filter can be used for the operation with an inverter output frequency of 60 Hz or lower.
It cannot be used for the operation with higher frequency. (Using it with the higher frequency will increases the filter loss.)
(c) It is applicable only under V/F control. (When **Pr.72** = "25", V/F control is automatically set.)
(d) When using the sine wave filter and the FR-HC2 together, use the MT-BSL-HC.

• Circuit configuration and connection

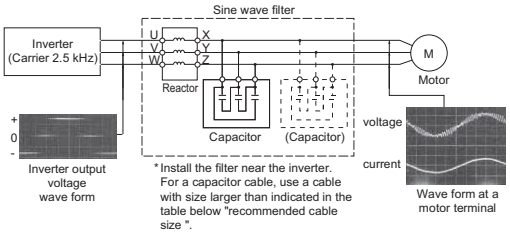

Motor capacity (kW) *1		Model: Reactor for filter	Rated current (A)	Capacitor for filter*2	Applicable inverter
200 V	75	MT-BSL-75K	288	1×MT-BSC-75K	Select an inverter where the rated motor current × 1.1 will be 90% or less of the inverter rated current.
	90	MT-BSL-90K	346	1×MT-BSC-90K	
400 V	75	MT-BSL-H75K(-HC)	144	1×MT-BSC-H75K	
	90	MT-BSL-H110K(-HC)	216	1×MT-BSC-H110K	
	110	MT-BSL-H110K(-HC)	216	1×MT-BSC-H110K	
	132	MT-BSL-H150K(-HC)	288	2×MT-BSC-H75K	
	160	MT-BSL-H220K(-HC)	432	2×MT-BSC-H110K	
	185	MT-BSL-H220K(-HC)	432	2×MT-BSC-H110K	
	220	MT-BSL-H220K(-HC)	432	2×MT-BSC-H110K	
	250	MT-BSL-H280K(-HC)	576	3×MT-BSC-H110K	
	280	MT-BSL-H280K(-HC)	576	3×MT-BSC-H110K	

*1 Assumes the use of a Mitsubishi Electric 4-pole standard motor.
*2 When using two or three capacitors, install them in parallel as shown in the wiring diagram.

• Reactor for sine wave filter

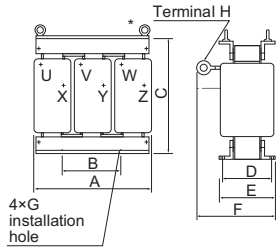

* Remove the eye nut after installation of the product.
This is a sample of the outer appearance, which differs depending on the model.

	Model	A	B	C	D	E	F	G	H	Mass (kg)
200 V	MT-BSL-75K	330	150	285	185	216	328	M10	M12	80
	MT-BSL-90K	390	150	320	180	220	330	M12	M12	120
400 V	MT-BSL-H75K	330	150	285	185	216	318	M10	M10	80
	MT-BSL-H75K-HC	385	150	345	185	216	315	M10	M10	110
	MT-BSL-H110K	390	150	340	195	235	368	M12	M12	140
	MT-BSL-H110K-HC	420	170	400	195	235	370	M12	M12	180
	MT-BSL-H150K	455	200	397	200	240	380	M12	M12	190
	MT-BSL-H150K-HC	450	300	455	390	430	500	M12	M12	250
	MT-BSL-H220K	495	200	405	250	300	420	M12	M12	240
	MT-BSL-H220K-HC	510	350	540	430	485	555	M12	M12	310
	MT-BSL-H280K	575	200	470	310	370	485	M12	M12	340
	MT-BSL-H280K-HC	570	400	590	475	535	620	M12	M12	480

Install the reactor on a horizontal surface.

• Capacitor for sine wave filter

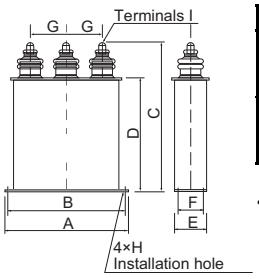

	Model	A	B	C	D	E	F	G	H	I	Mass(kg)
200 V	MT-BSC-75K	207	191	285	233	72	41	45	φ7	M8	3.9
	MT-BSC-90K	282	266	240	183	92	56	85	φ7	M12	5.5
400 V	MT-BSC-H75K	207	191	220	173	72	41	55	φ7	M6	3.0
	MT-BSC-H110K	207	191	280	233	72	41	55	φ7	M6	4.0

When installing, allow 25 mm or more gap between capacitors.

• Recommended cable gauge

The gauge of the cables used between the inverter and the MT-BSL as well as the MT-BSL and the motor varies according to U, V, and W as indicated on **page 181**.
The following table shows the cable gauge of the MT-BSC connecting cable.

MT-BSC-75K	MT-BSC-90K	MT-BSC-H75K	MT-BSC-H110K
38 mm^2	38 mm^2	22 mm^2	22 mm^2

Dedicated cable option

Name (model)	Specification and structure
Encoder cable FR-V7CBL[]	

• For dedicated motors

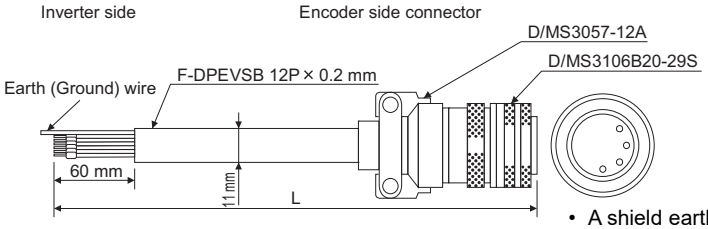

• A shield earthing (grounding) P-clip is included.

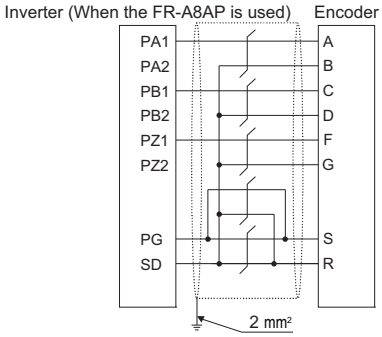

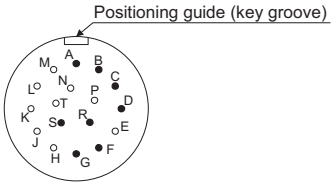

D/MS3106B20-29S
(As viewed from wiring side)

Model	Length L (m)
FR-V7CBL5	5
FR-V7CBL15	15
FR-V7CBL30	30

• For cables of 30 m or longer, contact your sales representative.

• Cable fabrication specifications
When option connection cables are not available, fabricate cables according to the following table.
Use parallel connection or a large-gauge cable for wiring between terminals PG and SD and the motor end encoder. (For cables for other terminals, use 0.2 mm^2 cables.)

Wiring distance	Optional dedicated encoder cable	Cable gauge for terminals PG and SD	
		For wiring using 0.2 mm^2 cables	For wiring using a cable with larger gauge
5 m or lower	FR-V7CBL5	2 or more cables in parallel	0.4 mm^2 or more
10 m or lower	FR-V7CBL15	2 or more cables in parallel	
15 m or lower		4 or more cables in parallel	0.75 mm^2 or more
20 m or lower	FR-V7CBL30	4 or more cables in parallel	
30 m or lower		6 or more cables in parallel	1.25 mm^2 or more
50 m or lower	* Cables on order Consult us separately.	6 or more cables in parallel	
100 m or lower			

Encoder connector (DDK Ltd.) (reference) (unit: mm)

Straight plug D/MS3106B20-29S

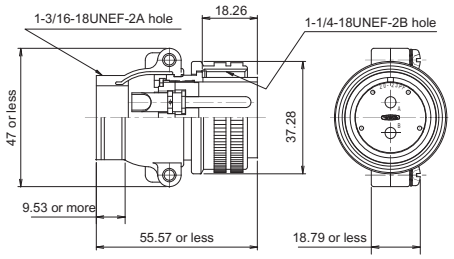

Angle plug D/MS3108B20-29S

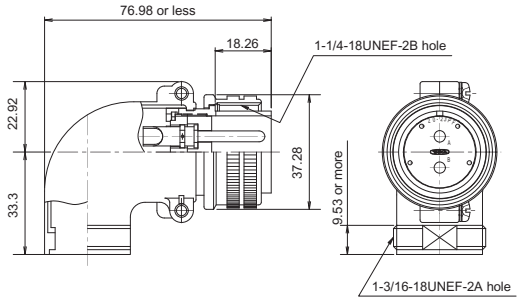

• This angle type connector is not an option item. Prepare the connector at the customer's side.

Cable clamp D/MS3057-12A

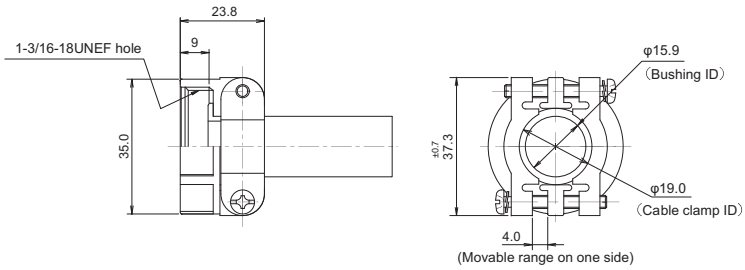

Cable glands and nuts (IP55 compatible model)

For wiring of the IP55 compatible model, fix the cables using a cable gland and a nut, according to the diameter of the holes of the wiring cover.
For the details such as wiring cover hole diameters and recommended cable glands, refer to the following table.

FR-A846-00023(0.4K) to 00170(5.5K)

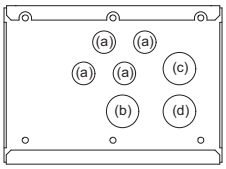

FR-A846-00250(7.5K) to 00470(18.5K)

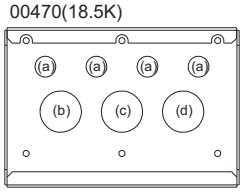

FR-A846-00620(22K) to 01160(45K)

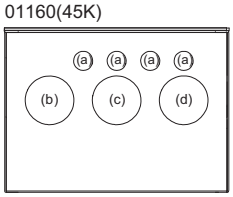

FR-A846-01800(55K) to 03610(132K)

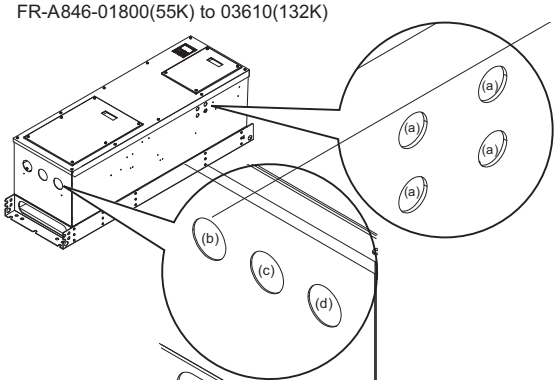

Inverter capacity	Symbol	Recommended layout example	Hole diameter (mm)	Recommended cable gland (Manufactured by LAPP)	Recommended nut (Manufactured by LAPP)
FR-A846-00023(0.4K) to 00170(5.5K)	(a)	Control circuit wiring	20.3	SKINTOP MS-SC-M20 53112630 *1 SKINTOP MS-M20 53112020 *2	SKINDICHT SM-M20 52103020
	(b)	AC power input wiring	32.3	SKINTOP MS-SC-M32 53112650 *1 SKINTOP MS-M32 BRUSH 53112677 *1 SKINTOP MS-M32 53112040 *2	SKINDICHT SM-M32 52103040
	(c)	Brake unit connection wiring			
	(d)	Inverter output wiring			
FR-A846-00250(7.5K) to 00470(18.5K)	(a)	Control circuit wiring	20.3	SKINTOP MS-SC-M20 53112630 *1 SKINTOP MS-M20 53112020 *2	SKINDICHT SM-M32 52103020
	(b)	AC power input wiring	40.4	SKINTOP MS-SC-M40 53112660 *1 SKINTOP MS-M40 BRUSH 53112678 *1 SKINTOP MS-M40 53112050 *2	SKINDICHT SM-M40 52103050
	(c)	Brake unit connection wiring			
	(d)	Inverter output wiring			
FR-A846-00620(22K) to 02600(90K)	(a)	Control circuit wiring	20.3	SKINTOP MS-SC-M20 53112630 *1 SKINTOP MS-M20 53112020	SKINDICHT SM-M20 52103020
	(b)	AC power input wiring	63	SKINTOP MS-M63 BRUSH 53112680 *1 SKINTOP MS-M63 53112070 *2	SKINDICHT SM-M63 52103070
	(c)	Brake unit connection wiring			
	(d)	Inverter output wiring			
FR-A846-03250(110K) to 03610(132K)	(a)	Control circuit wiring	20.3	SKINTOP MS-SC-M20 53112630 *1 SKINTOP MS-M20 53112020 *2	SKINDICHT SM-M20 52103020
	(b)	AC power input wiring	63	SKINTOP MS-M63 BRUSH PLUS 53112681 *1 SKINTOP MS-M63 PLUS 53112080 *2	SKINDICHT SM-M63 52103070
	(c)	Brake unit connection wiring			
	(d)	Inverter output wiring			

*1 EMC-compliant cable gland
*2 General-purpose cable gland

Recommended EMI filter

To support compliance with shipping classifications, use the following input line filter or an equivalent for electromagnetic compatibility (EMC). The following table indicates the specifications of the EMI filters used with inverters.

Inverter model FR-A840-[ ]	EMI filter model (Soshin Electric Co., Ltd.)			
	SLD	LD	ND	HD
00023(0.4K)	HF3010C-SZA			
00038(0.75K)				
00052(1.5K)				
00083(2.2K)	HF3020C-SZA			
00126(3.7K)				
00170(5.5K)	HF3030C-SZA		HF3020C-SZA	
00250(7.5K)	HF3030C-SZA			
00310(11K)	HF3040C-SZA			
00380(15K)	HF3050C-SZA		HF3040C-SZA	
00470(18.5K)	HF3060C-SZA			
00620(22K)	HF3080C-SZA			
00770(30K)	HF3100C-SZA			
00930(37K)	HF3150C-SZA	HF3100C-SZA		
01160(45K)	HF3150C-SZA			
01800(55K)	HF3200C-SZA			
02160(75K)	HF3250C-SZA			
02600(90K)				

Inverter model FR-A840-[ ]	EMI filter model (Soshin Electric Co., Ltd.)			
	SLD	LD	ND	HD
03250(110K)	HF3600C-SJB	HF3300C-SJB		
03610(132K)	HF3600C-SJB		HF3300C-SJB	
04320(160K)	HF3600C-SJB			
04810(185K)				
05470(220K)				
06100(250K)				
06830(280K)	HF31000C-SJB			

Inverter model FR-A842-[ ]	EMI filter model			
	SLD	LD	ND	HD
07700(315K)	HF31000C-SJB			
08660(355K)				
09620(400K)				
10940(450K)	HF31200C-SJB			
12120(500K)	HF31600C-SJB			

- Noise filter wiring example
  Install the recommended EMI filter by Soshin Electric Co., Ltd. to the input side of the inverter, as shown on the right.

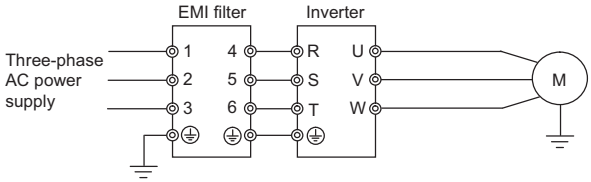

Recommended ferrite core (IP55 compatible model)

To support compliance with shipping classifications, install the recommended ferrite core (ESD-SR-250 manufactured by TOKIN Corporation) or an equivalent by two turns (passing the cable twice through the core) for wiring of control circuit terminals for electromagnetic compatibility (EMC).

Example of installing ferrite cores

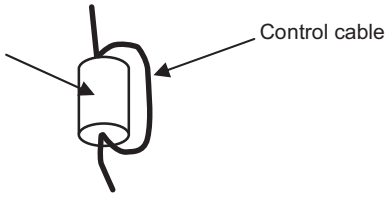

For using one ferrite core

For using two ferrite cores

◆ Motor surge absorber unit and micro surge suppression filter unit

These units suppress motor surges and micro surges generated by inverter-driven motors, reducing motor insulation degradation.

Model: MTUL®

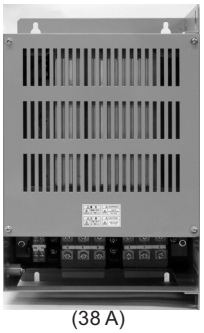

(38 A)

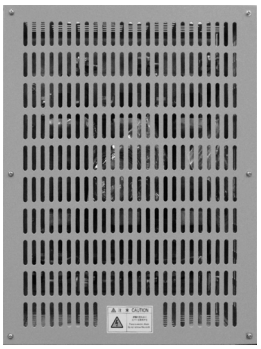

Model: MSSU®
(150 A to 350 A)

• Specifications

Motor surge absorber unit

For motors driven by 400 V and 690 V series inverters (The motor capacity does not need to be considered.)

Item		Specifications		
		MTUL-442-[]	MTUL-445-[]	MTUL-692-[]
Rated voltage (V)		440 VAC ±10% 600 VDC ±10%		690 VAC ±10% 1000 VDC ±10%
Rated current (A)		6 Arms AC		
Withstand voltage		2.5 kV for 1 minute		
Inverter carrier frequency (Hz)		2 kHz MAX	5 kHz MAX	2 kHz MAX
Wiring length between the inverter and the motor		Cable impedance 20 to 50 Ω, 100 m or shorter		
Protective structure		IP55		
Paint color		Munsell 5Y7/1		
Dimensions (mm)		W:210, H:300, D:160	W:430, H:300, D:190	
Mass (kg)		6 kg	11 kg	14 kg
Operating environment	Altitude	Maximum 1000 m		
	Surrounding air temperature	0°C to 50°C (non-freezing)		
	Humidity	90% RH or less (non-condensing)		

Micro surge suppression filter unit

For motors driven by 400 V series inverters

Item		Specifications													
Model: MSSU		2010C *4	2018C *4	2038C *4	2057C *4	2076C*4	2110C*4	2150N *2	2150C *2	2220N *2	2220C *2	2340N *2	2340C *2	2450N*1	2600N*1
Rated current		10 A	18 A	38 A	57 A	76 A	110 A	150 A		220 A		340 A		450 A	600 A
Overload current rating		150% 60 s													
Rated voltage		400/440 VAC ±10%													
Withstand voltage		2 kV for 1 minute													
Cable for connecting the unit and the motor		Maximum 100 m													
Inverter carrier frequency		2 kHz or lower*5													
Protective structure		Open type (IP00)													
Outline dimensions (W×H×D) mm		220×395×165 (Figure A)		260×410×180 (Figure A)		280×430×200 (Figure A)	320×510×210 (Figure A)	400×465×240 (Figure B)*3		440×550×280 (Figure B)*3		440×550×280 (Figure B)*3		Main unit: 400×465×105 (Figure C) Reactor: 340×345×298 (Figure D)	Main unit: 400×465×105 (Figure C) Reactor: 400×480×595 (Figure E)
Paint color		Munsell 5Y7/1													
Approx. mass (kg)		9	9.5	13	15	20	24	22	26	34	39	52	57	Main unit: 7 Reactor: 67	Main unit: 7 Reactor: 118
Operating environment	Location	Indoor													
	Altitude	Maximum 1000 m													
	Surrounding air temperature	-10°C to 50°C (non-freezing)													
	Humidity	90% or less (non-condensing)													

*1 The main unit and the reactor are separated for the MSSU-2450N/2600N.
*2 The products rated from 150 A to 340 A with/without cover are available. Models without cover are suffixed with "N", and models with cover are suffixed with "C". The product rated at 450 A does not have a cover. For the products without cover, provide a separate safety cover for storage in the enclosure.
*3 Figure B shows a product with a cover.
*4 The products rated at 110 A or lower have a cover as standard.
*5 Products rated from 10 A to 110 A can also be used with a 4 kHz carrier frequency.

• Wiring

Motor surge absorber unit
Stand-alone type installed near the motor

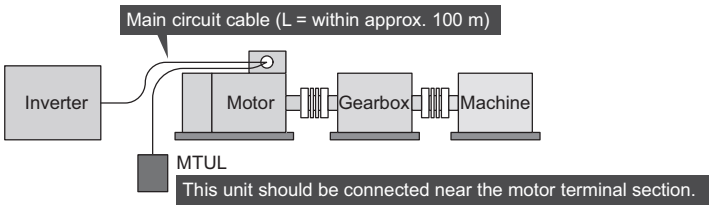

Micro surge suppression filter unit
Enclosure storage type

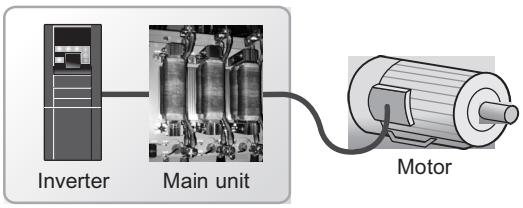

• Outline dimension drawings

MTUL-442-[] (440 V series, 2 kHz)

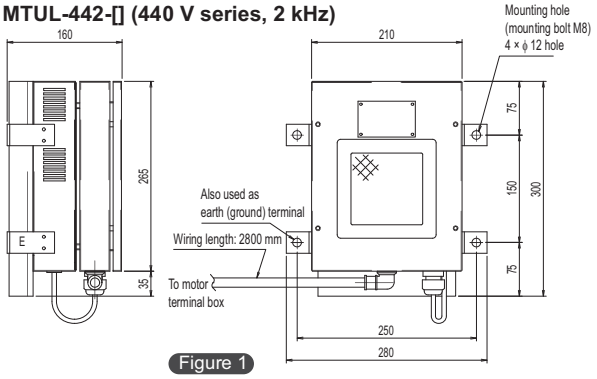

Figure 1

MTUL-445-[] (440 V series, 5 kHz)

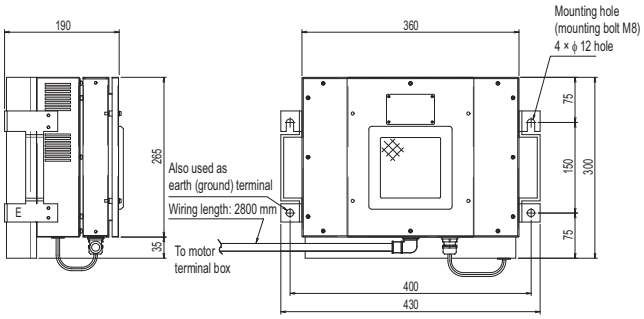

Figure 2

MTUL-692-[] (690 V series, 2 kHz)

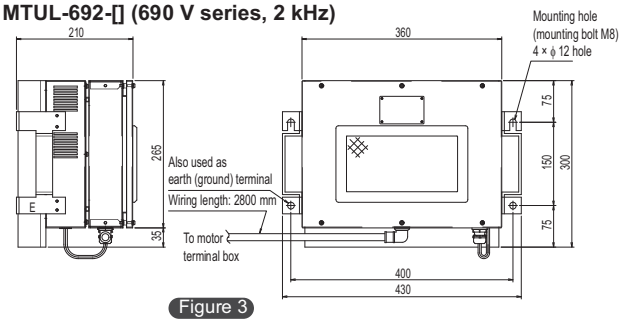

Figure 3

MSSU-2010C to 2110C
Product with cover

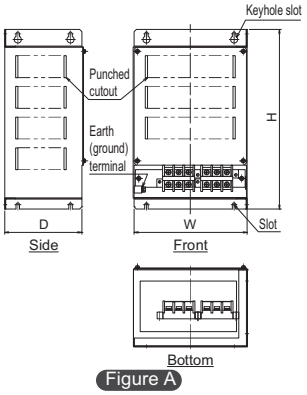

Figure A

MSSU-2150/2220/2340
Product with cover

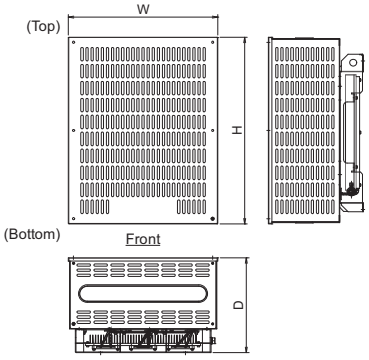

Figure B

MSSU-2450N/2600N main unit

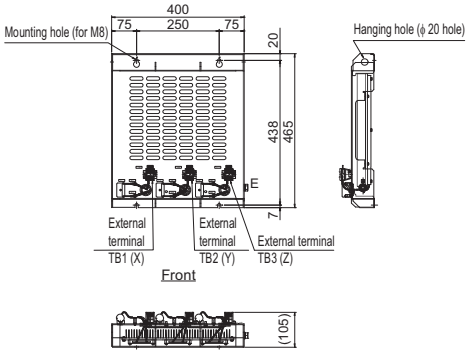

Figure C

MSSU-2450N reactor

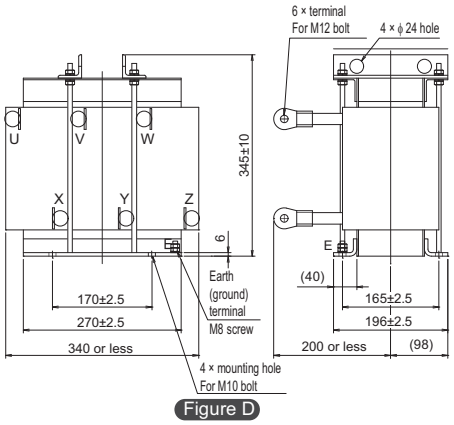

Figure D

MSSU-2600N reactor

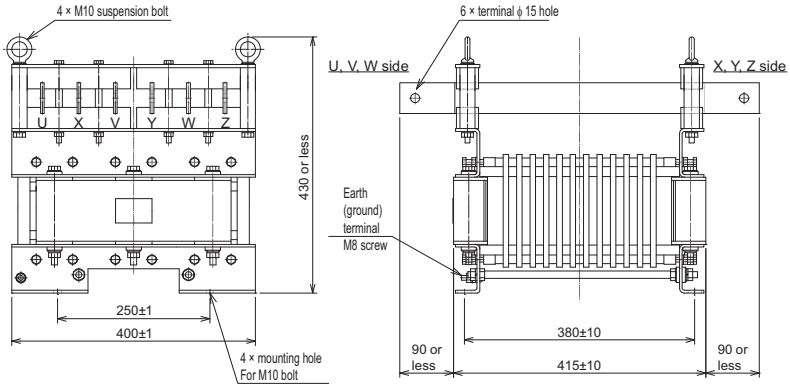

Figure E

Mitsubishi Electric Molded Case Circuit Breakers and Earth Leakage Circuit Breakers WS-V Series

Our main series of products in the industry's smallest class with high breaking capability enabled by a new breaking technology.
The new WS-V series breaker has enhanced usability by further standardizing internal parts, meets international standards, and addresses environmental and energy-saving issues.

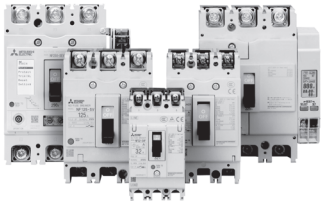

◆ Features

◆ A 54-mm-wide body, which belongs to the smallest class in the industry

The compact body allows for downsizing of the equipment and enclosure.
The breakers have been downsized to 54 mm wide and 52 mm depth (decreased by 16 mm compared with S-class general-purpose products).

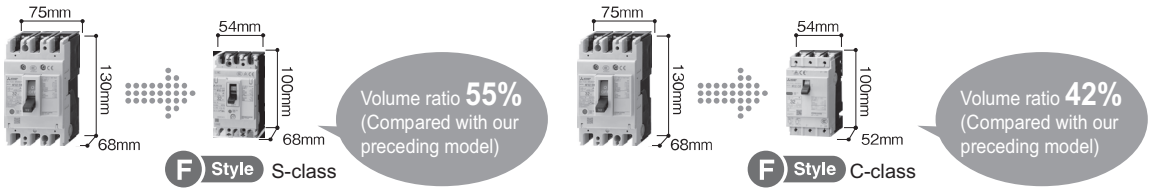

When multiple units are used, the width becomes significantly smaller.

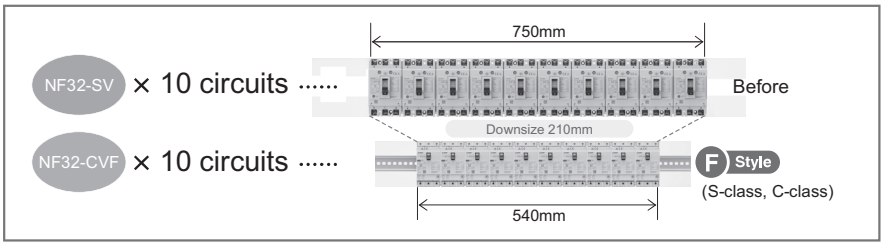

◆ Conforms to various global standards

- New JIS standard: JIS C 8201-2-1 (NF) Annex 1 and Annex 2
- Electrical Appliances and Materials Safety Act (PSE)
- IEC standard: IEC 60947-2
- EN (Europe): EN 60947-2, CE marking (TÜV certification, self declaration)
- GB standard (China): GB/T 14048.2 CCC certification
- Safety certification (Korea): KC marking

◆ Three-phase power supply supported by CE/CCC marked earth leakage circuit breakers

GB/T 14048.2-2008 was established in China, requiring the earth leakage circuit breaker to fulfill its function even if a phase is lost as is the case with the EN standard in Europe. CE/CCC marked earth leakage circuit breakers of the WS-V series support three phase power supply. Compliance with the revised standard is certified.

◆ Lineup of UL 489 listed circuit breakers with 54 mm width "Small Fit" F Style

The compact breakers contribute to a size reduction of machines, and IEC 35 mm rail mounting is standard.

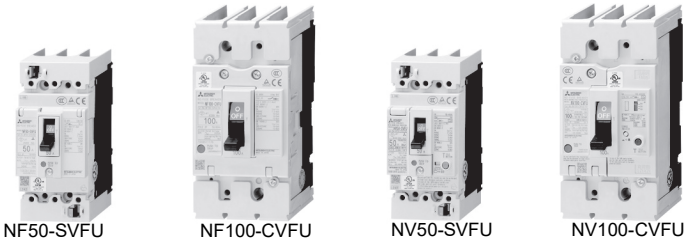

NF50-SVFU NF100-CVFU NV50-SVFU NV100-CVFU

For security and standard compliance of machines, F-type and V-type operating handles are available for breakers with 54 mm width.

◆ Lineup of UL 489 listed circuit breakers for 480 V AC "High Performance"

The breaking capacity has been improved to satisfy the request for SCCR upgrading.

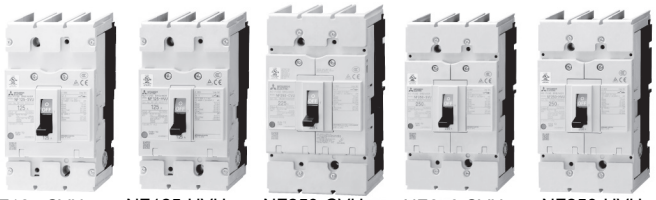

NF125-SVU NF125-HVU NF250-CVU NF250-SVU NF250-HVU

Breaking capacity of UL 489 listed circuit breakers for 480 V AC (UL 489) (Example of 240 V AC)
NF125-SVU/NV125-SVU .....50 kA
NF125-HVU/NV125-HVU .....100 kA
NF250-CVU/NV250-CVU .....35 kA
NF250-SVU/NV250-SVU .....65 kA
NF250-HVU/NV250-HVU .....100 kA

● Mitsubishi Electric Magnetic Motor Starters and Magnetic Contactors MS-T Series

Mitsubishi Electric magnetic motor starters have been newly designed and the MS-T series has been released.
The MS-T series is smaller than ever, enabling more compact control panel. The MS-T series is suitable for other Mitsubishi Electric FA equipment. In addition, the MS-T conforms to a variety of global standards, supporting the global use.

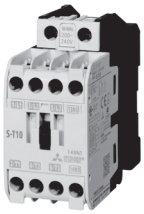
S-T10

◆ Features

◆ Compact

General-purpose magnetic contactor with smallest width*1 in the industry.
The width of MS-T series is reduced by 32% as compared to the prior MS-N series, enabling a more compact panel.
For selection, refer to **page 181**.

*1 Based on Mitsubishi Electric research as of November 2020 in the general-purpose magnetic contactor industry for 10 A-frame class.

[Unit: mm]

Frame size	11A	13A		20A	25A	32A
MS-N series	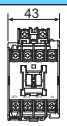 43 S-N10	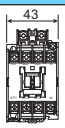 43 S-N11 (Auxiliary 1-pole)	53 S-N12 (Auxiliary 2-pole)	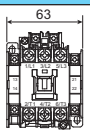 63 S-N20	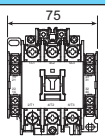 75 S-N25	None
New MS-T series	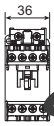 36 −7mm! S-T10	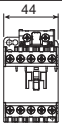 44 −9mm! S-T12 (Auxiliary 2-pole)		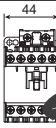 44 −19mm! S-T20	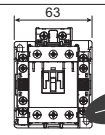 63 −12mm! S-T25	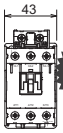 43 New S-T32

Frame size	35A	50A		65A		80A	100A
MS-N series	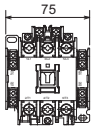 75 S-N35	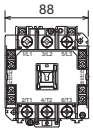 88 S-N50	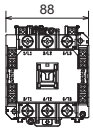 88 S-N50AE	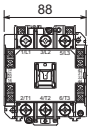 88 S-N65	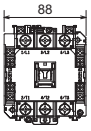 88 S-N65AE	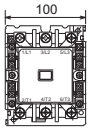 100 S-N80	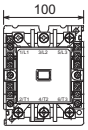 100 S-N95
New MS-T series	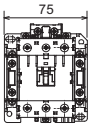 75 S-T35	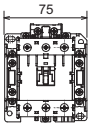 75 −13mm! S-T50		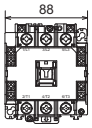 88 S-T65		88 −12mm! S-T80	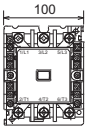 100 S-T100

◆ Standardization

- Terminal covers are provided as standard to ensure safety inside the enclosure. Users do not have to make arrangements to specify and obtain options separately. Covers are provided also for the auxiliary contact unit. Users can reduce their inventory.

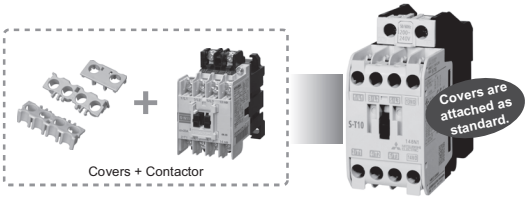

(Conventional product) (MS-T series)

- Widened range of operation coil ratings (AC operated model)
  The widened range reduces the number of operation coil rating types from 13 (MS-N series) to 7.
  The reduced number of the operation coil types enables more simplified customers' ordering process and the faster delivery.
- Customers can select the operation coil more easily.

(Conventional product)

Coil designation	Rated voltage [V] 50 Hz	Rated voltage [V] 60 Hz
24 VAC	24	24
48 VAC	48 to 50	48 to 50
100 VAC	100	100 to 110
120 VAC	110 to 120	115 to 120
127 VAC	125 to 127	127
200 VAC	200	200 to 220
220 VAC	208 to 220	220
230 VAC	220 to 240	230 to 240
260 VAC	240 to 260	260 to 280
380 VAC	346 to 380	380
400 VAC	380 to 415	400 to 440
440 VAC	415−440	460 to 480
500 VAC	500	500 to 550

(MS-T series)

Coil designation	Rated voltage [V] 50 Hz/60 Hz
24 VAC	24
48 VAC	48 to 50
100 VAC	100 to 127
200 VAC	200 to 240
300 VAC	260 to 300
400 VAC	380 to 440
500 VAC	460 to 550

Integrated coil ratings facilitate selection!

*Seven types are available without change for the 50 A frame model or higher.

◆ Global Standard

- Conforms to various global standards
  Our magnetic contactors are certified as compliant not only with major international standards such as IEC, JIS, UL, CE, and CCC but also with ship classification standards and country specific standards.
  This will help our customers expand their business overseas.

Standard	Applicable standard					Safety standard
	International	Japan	Europe		China	U.S.A./ Canada
	IEC*2	JIS	EN EC Directive CE	Certification body TÜV Rheinland	GB CCC	c UL us

*2 Compliant with the requirements for mirror contacts in standards such as IEC 60947-4-1, and TÜV-certified.

Spring Clamp Terminal Models Available for Mitsubishi Electric Magnetic Contactor and Magnetic Relay

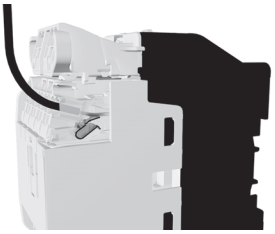

Spring clamp terminal:
Easy-to-connect terminal that ensures connection with the contact pressure of the spring just by pushing wire into the conductive terminal. Solid wires and ferrules can be connected simply by inserting them into the terminals.
Stranded wires can be connected by opening the spring with a tool, inserting wire, and removing the tool.

◆ Features

Key features of the screwless terminals:

- Significant reduction in the time required for wiring
  Comparison with the terminal screw model (with round crimp terminal)
  Wiring with ferrules: 22% reduction
  Wiring with solid or stranded wire: 52% reduction
  Reduction in the time required for wiring
  Wiring performed by non-experts (with 2-year experience) (The research conducted by Japan Switchboard & control system Industries Association)
- Easy wiring for whoever works on
  Push-in connection eliminates the need for the screw-tightening skills.
- Enhanced maintenance efficiency
  Screw retightening is not necessary for installation and maintenance of enclosures and machines.
- Reliable wire connection
  There is no risk of terminal screw loosening due to vibration or shocks, or long-term service.

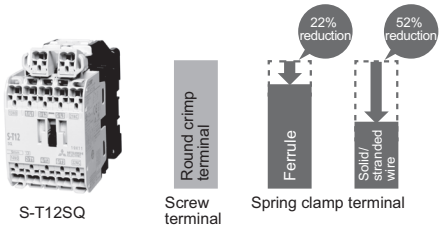

Selecting the rated sensitivity current for the earth leakage circuit breaker

When using an earth leakage circuit breaker with the inverter circuit, select its rated sensitivity current as follows, independently of the PWM carrier frequency.

- Breaker designed for harmonic and surge suppression
  Rated sensitivity current
  $I\Delta n \geq 10 \times (Ig1+Ign+Igi+Ig2+Igm)$
- Standard breaker
  Rated sensitivity current
  $I\Delta n \geq 10 \times \{Ig1+Ign+Igi+3 \times (Ig2+Igm)\}$
  Ig1, Ig2: Leakage currents in wire path during commercial power supply operation
  Ign: Leakage current of inverter input side noise filter
  Igm: Leakage current of motor during commercial power supply operation
  Igi: Leakage current of inverter unit

Example of leakage current of cable path per 1 km during the commercial power supply operation when the CV cable is routed in metal conduit
(200 V 60 Hz)

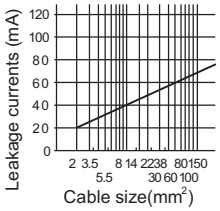

Leakage current example of three-phase induction motor during the commercial power supply operation
(200 V 60 Hz)

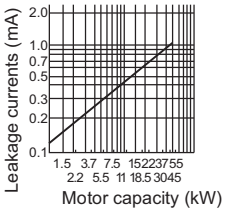

Example of leakage current per 1 km during the commercial power supply operation when the CV cable is routed in metal conduit
(Three-phase three-wire delta connection 400 V 60 Hz)

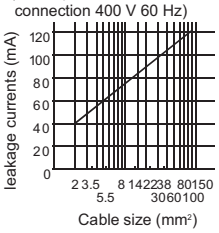

Leakage current example of three-phase induction motor during the commercial power supply operation
(Totally-enclosed fan-cooled type motor 400 V 60 Hz)

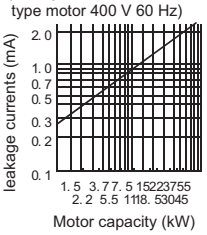

For "⅄" connection, the amount of leakage current is approx.1/3 of the above value.

<Example>

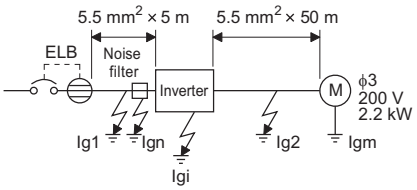

(a) Install the earth leakage circuit breaker (ELB) on the input side of the inverter.

(b) In the ⅄ connection earthed-neutral system, the sensitivity current is blunt against a ground fault in the inverter output side. Earthing (Grounding) must conform to the requirements of national and local safety regulations and electrical codes. (NEC section 250, IEC 61140 class 1 and other applicable standards)

◆ Selection example (in the case of the above figure)

	Breaker designed for harmonic and surge suppression	Standard breaker
Leakage current Ig1 (mA)	$33 \times \frac{5\ m}{1000\ m} = 0.17$	
Leakage current Ign (mA)	0 (without noise filter)	
Leakage current Igi (mA)	1 (without EMC filter) Refer to the following table for the leakage current of the inverter.*1	
Leakage current Ig2 (mA)	$33 \times \frac{50\ m}{1000\ m} = 1.65$	
Motor leakage current Igm (mA)	0.18	
Total leakage current (mA)	3.00	6.66
Rated sensitivity current (mA) (≥Ig × 10)	30	100

*1 For whether to use the EMC filter or not, refer to the Instruction Manual (Detailed).

◆ Inverter/converter unit leakage current

200 V class (Input power supply conditions: 220 V/60 Hz, power supply unbalance: within 3%)

Inverter	FR-A820 (Standard model)	
EMC filter	ON	OFF
Phase earthing (grounding)	22	1

(mA)

400 V class (Input power supply conditions: 440 V/60 Hz, power supply unbalance: within 3%)

Inverter/ converter unit	FR-A840 (Standard model)		FR-A846-C3 (IP55 compatible model)		FR-A846-C2 (IP55 compatible model)	FR-A842 (Separated converter type)	Converter unit FR-CC2	
EMC filter	ON	OFF	ON	OFF	ON *1	—	ON	OFF
Phase earthing (grounding)	35	2	35	2	— *2	2	70	2
Earthed-neutral system	2	1	2	1	2	1	2	1

(mA)

Inverter/ converter unit	FR-A842M (Separated converter type)	Converter unit FR-CC2M	
EMC filter	—	ON	OFF
Phase earthing (grounding)	25	50	3
Earthed-neutral system	25	1	1

(mA)

*1 Do not change the initially set ON (enabled) position of the EMC filter ON/OFF connector in the case of the inverter with a built-in C2 filter. The Class C2 compatibility condition is not satisfied with the EMC filter OFF. (The FR-A846-00250(7.5K)-C2 to FR-A846-00470(18.5K)-C2 are not provided with the EMC filter ON/OFF connector. The EMC filter is always ON.)

*2 The inverter with a built-in C2 filter must be used in the earthed-neutral system.

Molded case circuit breaker, magnetic contactor, cable gauge

The following tables show the recommended cable size for cables that are 20 m in length. Select a recommended size cable to ensure that the voltage drop ratio is within 2%. If the wiring distance is long between the inverter and motor, the voltage drop in the main circuit will cause the motor torque to decrease especially at a low speed.

$$\text{Line voltage drop [V]} = \frac{\sqrt{3} \times \text{wire resistance [m}\Omega\text{/m]} \times \text{wiring distance [m]} \times \text{current [A]}}{1000}$$

Use a larger diameter cable when the wiring distance is long or when the voltage drop (torque reduction) in the low speed range needs to be reduced.

◆ 280K or lower

Voltage	Motor output (kW) *1	Applicable inverter model (ND rating)	Molded case circuit breaker (MCCB) *2 or earth leakage circuit breaker (ELB) (NF, NV type)		Input side magnetic contactor *3		Recommended cable gauge (mm^2) *4		
							R/L1, S/L2, T/L3		U, V, W
			Power factor improving (AC or DC) reactor connection		Power factor improving (AC or DC) reactor connection		Power factor improving (AC or DC) reactor connection		
			Without	With	Without	With	Without	With	
200 V	0.4	FR-A820-00046(0.4K)	5 A	5 A	S-T10	S-T10	2	2	2
	0.75	FR-A820-00077(0.75K)	10 A	10 A	S-T10	S-T10	2	2	2
	1.5	FR-A820-00105(1.5K)	15 A	15 A	S-T10	S-T10	2	2	2
	2.2	FR-A820-00167(2.2K)	20 A	15 A	S-T10	S-T10	2	2	2
	3.7	FR-A820-00250(3.7K)	30 A	30 A	S-T21	S-T10	3.5	3.5	3.5
	5.5	FR-A820-00340(5.5K)	50 A	40 A	S-T35	S-T21	5.5	5.5	5.5
	7.5	FR-A820-00490(7.5K)	60 A	50 A	S-T35	S-T35	14	14	8
	11	FR-A820-00630(11K)	75 A	75 A	S-T35	S-T35	14	14	14
	15	FR-A820-00770(15K)	125 A	100 A	S-T50	S-T50	22	22	22
	18.5	FR-A820-00930(18.5K)	150 A	125 A	S-T65	S-T50	38	22	22
	22	FR-A820-01250(22K)	175 A	125 A	S-T100	S-T65	38	38	38
	30	FR-A820-01540(30K)	225 A	150 A	S-T100	S-T100	60	60	60
	37	FR-A820-01870(37K)	250 A	200 A	S-N150	S-N125	80	60	60
	45	FR-A820-02330(45K)	300 A	225 A	S-N180	S-N150	100	100	100
	55	FR-A820-03160(55K)	400 A	300 A	S-N220	S-N180	100	100	100
	75	FR-A820-03800(75K)	-	400 A	-	S-N300	-	125	125
	90	FR-A820-04750(90K)	-	400 A	-	S-N300	-	150	150
400 V	0.4	FR-A840-00023(0.4K)	5 A	5 A	S-T10	S-T10	2	2	2
	0.75	FR-A840-00038(0.75K)	5 A	5 A	S-T10	S-T10	2	2	2
	1.5	FR-A840-00052(1.5K)	10 A	10 A	S-T10	S-T10	2	2	2
	2.2	FR-A840-00083(2.2K)	10 A	10 A	S-T10	S-T10	2	2	2
	3.7	FR-A840-00126(3.7K)	20 A	15 A	S-T10	S-T10	2	2	2
	5.5	FR-A840-00170(5.5K)	30 A	20 A	S-T21	S-T12	2	2	2
	7.5	FR-A840-00250(7.5K)	30 A	30 A	S-T21	S-T21	3.5	3.5	3.5
	11	FR-A840-00310(11K)	50 A	40 A	S-T21	S-T21	5.5	5.5	5.5
	15	FR-A840-00380(15K)	60 A	50 A	S-T35	S-T21	8	5.5	5.5
	18.5	FR-A840-00470(18.5K)	75 A	60 A	S-T35	S-T35	14	8	8
	22	FR-A840-00620(22K)	100 A	75 A	S-T35	S-T35	14	14	14
	30	FR-A840-00770(30K)	125 A	100 A	S-T50	S-T50	22	22	22
	37	FR-A840-00930(37K)	150 A	100 A	S-T65	S-T50	22	22	22
	45	FR-A840-01160(45K)	175 A	125 A	S-T100	S-T65	38	38	38
	55	FR-A840-01800(55K)	200 A	150 A	S-T100	S-T100	60	60	60
	75	FR-A840-02160(75K)	-	200 A	-	S-T100	-	60	60
	90	FR-A840-02600(90K)	-	225 A	-	S-N150	-	60	60
	110	FR-A840-03250(110K)	-	225 A	-	S-N180	-	80	80
	132	FR-A840-03610(132K)	-	350 A	-	S-N220	-	100	100
	150	FR-A840-04320(160K)	-	400 A	-	S-N300	-	125	125
	160	FR-A840-04320(160K)	-	400 A	-	S-N300	-	125	125
	185	FR-A840-04810(185K)	-	400 A	-	S-N300	-	150	150
	220	FR-A840-05470(220K)	-	500 A	-	S-N400	-	2×100	2×100
	250	FR-A840-06100(250K)	-	600 A	-	S-N600	-	2×100	2×100
	280	FR-A840-06830(280K)	-	600 A	-	S-N600	-	2×125	2×125

*1 Assumes the use of a Mitsubishi Electric 4-pole standard motor with the motor capacity of 200/400 VAC 50 Hz.

*2 Select an MCCB according to the power supply capacity.
Install one MCCB per inverter.
(For the use in the United States or Canada, refer to "Instructions for UL and cUL" in the Instruction Manual (Startup), and select an appropriate fuse or molded case circuit breaker (MCCB).)

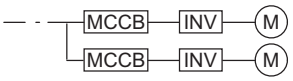

*3 The magnetic contactor is selected based on the AC-1 class. The electrical durability of magnetic contactor is 500,000 times. When the magnetic contactor is used for emergency stops during motor driving, the electrical durability is 25 times.
If using an MC for emergency stop during motor driving or using it on the motor side during commercial power supply operation, select an MC with the class AC-3 rated current for the rated motor current.

*4 Cables
For the FR-A820-03160(55K) or lower and the FR-A840-01800(55K) or lower, it is the gauge of a cable with the continuous maximum permissible temperature of 75°C. (HIV cable (600 V grade heat-resistant PVC insulated wire), etc.) It assumes a surrounding air temperature of 50°C or lower and the wiring distance of 20 m or shorter.
For the FR-A820-03800(75K) or higher and the FR-A840-02160(75K) or higher, it is the gauge of the cable with the continuous maximum permissible temperature of 90°C or higher. (LMFC (heat resistant flexible cross-linked polyethylene insulated cable), etc.) It assumes a surrounding air temperature of 50°C or lower and in-enclosure wiring.

NOTE

- When the inverter capacity is larger than the motor capacity, select an MCCB and a magnetic contactor according to the inverter model, and select cables and reactors according to the motor output. Incorrect selection may cause an inrush current at power ON, resulting in output shutoff by the breaker. Since the current is reduced based on the motor capacity, select cables and reactors according to the motor output. However, output shutoff by the MCCB may be disabled if the difference between the inverter capacity and the motor capacity is too large.
- When the breaker on the inverter's input side trips, check for the wiring fault (short circuit), damage to internal parts of the inverter etc. The cause of the trip must be identified and removed before turning ON the power of the breaker.

◆ 315K or higher

Voltage	Motor output (kW) *1	Applicable inverter model (ND rating)	Applicable converter model	Molded case circuit breaker (MCCB) *2 or earth leakage circuit breaker (ELB) (NF, NV type)	Input-side magnetic contactor *3	HIV cables, etc. (mm^2) *4		
						R/L1, S/L2, T/L3	P/+, N/-	U, V, W
400 V	315	FR-A842-07700(315K)	FR-CC2-H315K	700 A	S-N600	2×150	2×150	2×150
	355	FR-A842-08660(355K)	FR-CC2-H355K	800 A	S-N600	2×200	2×200	2×200
	400	FR-A842-09620(400K)	FR-CC2-H400K	900 A	S-N800	2×200	2×200	2×200
	450	FR-A842-10940(450K)	FR-CC2-H450K	1000 A	1000 A rated product	2×250	2×250	2×250
	500	FR-A842-12120(500K)	FR-CC2-H500K	1200 A	1000 A rated product	3×200	3×200	2×250

*1 Assumes the use of a Mitsubishi Electric 4-pole standard motor with the motor capacity of 400 VAC 50 Hz.

*2 Select an MCCB according to the power supply capacity.
Install one MCCB per converter unit.
(For the use in the United States or Canada, refer to "Instructions for UL and cUL" in the Instruction Manual (Hardware), and select an appropriate fuse or molded case circuit breaker (MCCB).)

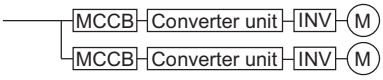

*3 The magnetic contactor is selected based on the AC-1 class. The electrical durability of magnetic contactor is 500,000 times. When the magnetic contactor is used for emergency stops during motor driving, the electrical durability is 25 times.
If using an MC for emergency stop during driving the motor, select an MC regarding the converter unit input side current as JEM1038-AC-3 class rated current. When using an MC on the inverter output side for commercial-power supply operation switching using a general-purpose motor, select an MC regarding the rated motor current as JEM1038-AC-3 class rated current.

*4 The gauge of the cable with the continuous maximum permissible temperature of 90°C or higher. (LMFC (heat resistant flexible cross-linked polyethylene insulated cable), etc.). It assumes a surrounding air temperature of 50°C or lower and in-enclosure wiring.

NOTE

- When the converter unit capacity is larger than the motor capacity, select an MCCB and a magnetic contactor according to the converter unit model, and select cables and reactors according to the motor output. Incorrect selection may cause an inrush current at power ON, resulting in output shutoff by the breaker. Since the current is reduced based on the motor capacity, select cables and reactors according to the motor output. However, output shutoff by the MCCB may be disabled if the difference between the converter unit capacity and the motor capacity is too large.
- When the breaker on the converter unit's input side trips, check for the wiring fault (short circuit), damage to internal parts of the inverter and the converter unit, etc. The cause of the trip must be identified and removed before turning ON the power of the breaker.

Precaution on Selection and Operation

Precautions for use

◆ ⚠ Safety instructions

- To use the product safely and correctly, make sure to read the "Instruction Manual" before the use.
- This product has not been designed or manufactured for use with any equipment or system operated under life-threatening conditions.
- Please contact our sales representative when considering using this product in special applications such as passenger mobile, medical, aerospace, nuclear, power or undersea relay equipment or system.
- Although this product was manufactured under conditions of strict quality control, install safety devices to prevent serious accidents when it is used in facilities where breakdowns of the product or other failures are likely to cause a serious accident.
- Do not use the inverter for a load other than the three-phase induction motor and the PM motor.
- Do not connect a PM motor in the induction motor control settings (initial settings). Do not use an induction motor in the PM sensorless vector control settings. It will cause a failure.
- When using a PM motor, also refer to the precautions for use of the PM motors.

◆ Operation

- When a magnetic contactor (MC) is installed on the input side, do not use the MC for frequent starting/stopping. Doing so may damage the inverter.
- When a fault occurs in the inverter, the protective function is activated to stop the inverter output. However, the motor cannot be immediately stopped. For machinery and equipment that require an immediate stop, provide a mechanical stop/holding mechanism.
- Even after turning OFF the inverter/the converter unit, it takes time to discharge the capacitor. Before performing an inspection, wait 10 minutes or longer after the power supply turns OFF, then check the voltage using a tester, etc.
- To maintain the security (confidentiality, integrity, and availability) of the inverter and the system against unauthorized access, DoS*1 attacks, computer viruses, and other cyberattacks from external devices via network, take appropriate measures such as firewalls, virtual private networks (VPNs), and antivirus solutions. We shall have no responsibility or liability for any problems involving inverter trouble and system trouble by DoS attacks, unauthorized access, computer viruses, and other cyberattacks.

  *1 DoS: A denial-of-service (DoS) attack disrupts services by overloading systems or exploiting vulnerabilities, resulting in a denial-of-service (DoS) state.

◆ Wiring

- Applying the power to the inverter output terminals (U, V, W) causes a damage to the inverter. Before power-on, thoroughly check the wiring and sequence to prevent incorrect wiring, etc.
- Terminals P/+, P1, and N/- are the terminals to connect dedicated options or DC power supply (in the DC feeding mode). Do not connect any device other than the dedicated options or DC power supply (in the DC feeding mode). Do not short-circuit between the frequency setting power supply terminal 10 and the common terminal 5, and between terminals PC and SD.
- To prevent a malfunction due to noise, keep the signal cables 10cm or more away from the power cables. Also, separate the main circuit cables at the input side from the main circuit cables at the output side.
- After wiring, wire offcuts must not be left in the inverter/the converter unit. Wire offcuts can cause an alarm, failure or malfunction. Always keep the inverter/the converter unit clean. When drilling mounting holes in an enclosure etc., take caution not to allow chips and other foreign matter to enter the inverter/the converter unit.
- Set the voltage/current input switch correctly. Incorrect setting may cause a fault, failure or malfunction.

◆ Power supply

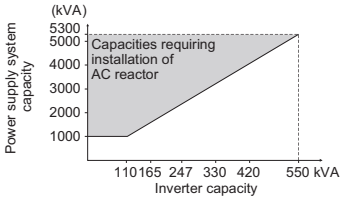

- When the inverter is connected near a large-capacity power transformer (1000 kVA or more) or when a power factor correction capacitor is to be switched over, an excessive peak current may flow in the power input circuit, damaging the inverter/converter unit. To prevent this, always install an optional AC reactor (FR-HAL).
- If surge voltage occurs in the power supply system, this surge energy may flow into an inverter/converter unit, and the inverter/converter unit may display the overvoltage protection (E. OV[]) and trip. To prevent this, install an optional AC reactor (FR-HAL).

◆ Installation

- Install the inverter in a clean place with no floating oil mist, cotton fly, dust and dirt, etc. Alternatively, install the inverter inside the "sealed type" enclosure that prevents entry of suspended substances. For installation in the enclosure, decide the cooling method and the enclosure size to keep the surrounding air temperature of the inverter within the permissible range (for specifications, refer to **page 37**).
- Some parts of the inverter/the converter unit become extremely hot. Do not install the inverter/the converter unit to inflammable materials (wood etc.).
- Attach the inverter vertically.

◆ Setting

- Depending on the parameter setting, high-speed operation (up to 590 Hz) is available. Incorrect setting will lead to a dangerous situation. Set the upper limit by using the upper frequency limit setting.
- Setting the DC injection brake operation voltage and operating time larger than their initial values causes motor overheating (electronic thermal O/L relay trip).

◆ Real sensorless vector control

- Under Real sensorless vector control, always execute offline auto tuning before starting operations.
- The selectable carrier frequencies under Real sensorless vector control are 2, 6, 10, and 14 kHz.
- Torque control is not available in the low-speed (about 10 Hz or less) regenerative range, or in the low speed with the light load (about 5 Hz or less with about 20% or less of the rated torque). Select the vector control.
- Performing pre-excitation (LX signal and X13 signal) under torque control may start the motor running at a low speed even when the start command (STF or STR) is not input. The motor may run also at a low speed when the speed limit value = 0 with a start command input. Confirm that the motor running will not cause any safety problem before performing pre-excitation.
- Under torque control, do not switch between the forward rotation command (STF) and reverse rotation command (STR). The overcurrent trip (E. OC[]) or opposite rotation deceleration fault (E.11) occurs.
- For FR-A820-00250(3.7K) or lower and FR-A840-00126(3.7K) or lower, if continuous operation is performed under Real sensorless vector control, speed fluctuation may increase at 20 Hz or lower, or insufficient torque may occur in a low-speed range under 1 Hz. In such a case, stop the inverter once and re-accelerate it.
- If the inverter may restart during coasting under Real sensorless vector control, set the automatic restart after instantaneous power failure function to enable frequency search (**Pr.57** ≠ "9999", **Pr.162** = "10").
- Under Real sensorless vector control, sufficient torque may not be obtained in the extremely low-speed range of about 2 Hz or less.
- The approximate speed control range is as described below.
  Power drive: 1:200 (2, 4, 6 poles), 0.3 Hz or more for 60 Hz rating.
  1:30 (8, 10 poles), 2 Hz or more for 60 Hz rating
  Regenerative driving: 1:12 (2 to 10 poles), 5 Hz or more for 60 Hz rating

◆ Waterproof and dustproof performances (IP55 compatible model)

- The inverter is rated with an IPX5*1 waterproof rating and an IP5X*2 dustproof rating when the operation panel (FR-DU08-01), the front cover, the wiring cover, and the cable glands are securely fixed with screws.
- The items enclosed with the inverter such as the Instruction Manual or CD are not rated with the IPX5 waterproof or IP5X dustproof ratings.
- Although the inverter is rated with the IPX5 waterproof and IP5X dustproof ratings, it is not intended for use in water. Also, the ratings do not guarantee protection of the inverter from needless submersion in water or being washed under strong running water such as a shower.
- Do not pour or apply the following liquids over the inverter: water containing soap, detergent, or bath additives; sea water; swimming pool water; warm water; boiling water; etc.
- The inverter is intended for indoor*4 installation and not for outdoor installation. Avoid places where the inverter is subjected to direct sunlight, rain, sleet, snow, or freezing temperatures.
- If the operation panel (FR-DU08-01) is not installed, if the screws of the operation panel are not tightened, or if the operation panel is damaged or deformed, the IPX5 waterproof performance and the IP5X dustproof performance are impaired. If any abnormalities are found on the operation panel, ask for an inspection and repair.
- If the screws of the front cover or the wiring cover are not tightened, if any foreign matter (hair, sand grain, fiber, etc.) is stuck between the inverter and the gasket, if the gasket is damaged, or if the front cover or the wiring cover is damaged or deformed, the IPX5 waterproof performance and the IP5X dustproof performance are impaired. If any abnormalities are found on the front cover, wiring cover, or the gasket of the inverter, ask for an inspection and repair.
- Cable glands are important components to maintain the waterproof and dustproof performances. Be sure to use cable glands of the recommended size and shape or equivalent. The standard protective bushes cannot sufficiently maintain the IPX5 waterproof performance and the IP5X dustproof performance.
- If a cable gland is damaged or deformed, the IPX5 waterproof performance and the IP5X dustproof performance are impaired. If any abnormalities are found on the cable glands, ask the manufacturer of the cable glands for an inspection and repair.
- To maintain the waterproof and dustproof performances of the inverter, daily and periodic inspections are recommended regardless of the presence or absence of abnormalities.

*1 IPX5 refers to protection of the inverter functions against water jets from any direction when about 12.5-liter water*3 is injected from a nozzle with an inside diameter of 6.3 mm from the distance of about 3 m for at least 3 minutes.
*2 IP5X refers to protection of the inverter functions and maintenance of safety when the inverter is put into a stirring device containing dust of 75 μm or smaller in diameter, stirred for 8 hours, and then removed from the device.
*3 Water here refers to fresh water at room temperature (5 to 35°C).
*4 Indoor here refers to the environments that are not affected by climate conditions.

● Precautions for use of PM motor

For using a PM motor, also check the following precautions.

◆ ⚠ Safety instructions

- Do not use a PM motor for an application where the motor is driven by the load and runs at a speed higher than the maximum motor speed.

◆ Combination of motor and inverter

- The rated motor current should be equal to or less than the inverter rated current. (It must be 0.4 kW or higher.)
  Using a motor with the rated current substantially lower than the inverter rated current will cause torque ripples, etc. and degrade the speed and torque accuracies.
  As a reference, select the motor with the rated motor current that is about 40% or higher of the inverter rated current.
- Only one PM motor can be connected to an inverter.
- A PM motor cannot be driven by the commercial power supply.

◆ Installation

- While power is ON or for some time after power-OFF, do not touch the motor since the motor may be extremely hot. Touching these devices may cause a burn.

◆ Wiring

- Applying the commercial power supply to input terminals (U,V, W) of a motor will burn the motor. The motor must be connected with the output terminals (U,V, W) of the inverter.
- A PM motor is a motor with permanent magnets embedded inside. High voltage is generated at the motor terminals while the motor is running. Before wiring or inspection, confirm that the motor is stopped.
  In an application, such a as fan or blower, where the motor is driven by the load, a low-voltage manual contactor must be connected at the inverter's output side, and wiring and inspection must be performed while the contactor is open. Otherwise an electric shock may be caused. The inverter power must be turned ON before closing the contacts of the contactor at the output side.
- Match the input terminals (U, V, W) of the motor and the output terminals (U, V, W) of the inverter when connecting.
- Keep the wiring length to 100 m or shorter when connecting a PM motor.

◆ Operation

- About 0.1 s (magnetic pole detection time) takes to start a motor after inputting a start signal.
- A PM motor is a motor with embedded permanent magnets. Regression voltage is generated when the motor coasts at an instantaneous power failure or other incidents.
  The inverter's DC bus voltage increases if the motor coasts fast in this condition. When using the automatic restart after instantaneous power failure function, it is recommended to also use the regeneration avoidance operation to make startups stable.
- The relationship between speed and frequency setting is:
  Speed = 120 × frequency setting value / number of motor poles

◆ Connection with machine

◆ Direct connection

- When installing, align the motor shaft center and the machine shaft. Insert a liner underneath the motor or the machine legs as required to make a perfect alignment.

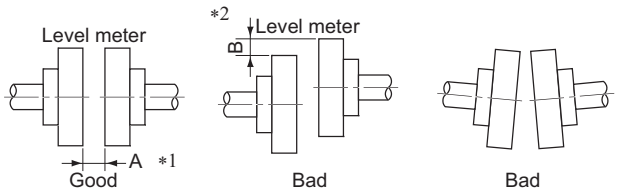

*1 Set so that the A dimensions become the same dimension even when any position is measured by feeler gauge (inequality in A width 3/100 mm or lower).

*2 Do not set parts with a vertical gap like B (maximum runoff degree: 3/100 mm).

NOTE

- When a fan or blower is directly connected to the motor shaft or to the machine, the machine side may become unbalanced. When the unbalanced degree becomes larger, the motor vibration becomes larger and may result in a damage of the bearing or other area. The balance quality with the machine should meet the class G2.5 or lower of JIS B0905 (the Balance Quality Requirements of Rigid Rotors).

◆ Connected by belt

- When installing, place the motor shaft and the machine shaft in parallel, and mount them to a position where their pulley centers are aligned. Their pulley centers should also have a right angle to each shaft.
- An excessively stretched belt may damage the bearing and break the shafts. A loose belt may slip off and easily deteriorate. A flat belt should be rotated lightly when it is pulled by one hand.
  For details, refer to the Instruction Manual of the motor.

◆ Connected by gear couplings

Place the motor and machine shafts in parallel, and engage the gear teeth properly.

◆ Permissible vibration during operation

During operation, the motor coupled to a load machine may vibrate according to the degree of coupling between the motor and the load, and the degree of vibration created by the load. The degree of the motor's vibration varies depending on the condition of the foundations and baseplate of the motor. If the motor has higher vibration than the permissible level, investigate the cause, take measure, and take action.
For further details on vibration, refer to the Instruction Manual of the motor.

● Selection precautions

◆ Inverter capacity selection

- When operating a special motor or multiple motors in parallel by one inverter, select the inverter capacity so that 1.05 times of the total of the rated motor current becomes less than the rated output current of the inverter.
  (Multiple PM motors cannot be connected to an inverter.)

◆ Starting torque of the motor

- The starting and acceleration characteristics of the motor driven by an inverter are restricted by the overload current rating of the inverter. In general, the torque characteristic has small value compared to when the motor is started by a commercial power supply. When a large starting torque is required, and torque boost adjustment, Advanced magnetic flux vector control, Real sensorless vector control, and vector control cannot generate the sufficient torque, select the HD rating, or increase both the motor and inverter capacities.

◆ Acceleration/deceleration time

- The motor acceleration/deceleration time is decided by the torque generated by the motor, load torque, and moment of inertia (J) of load.
- The required time may increase when the torque limit function or stall prevention function operates during acceleration/deceleration. In such a case, set the acceleration/deceleration time longer.
- To shorten the acceleration/deceleration time, increase the torque boost value (too large setting value may activate the stall prevention function, resulting in longer acceleration time at starting on the contrary). Alternatively, use Advanced magnetic flux vector control, Real sensorless vector control, or vector control, or select the larger inverter and motor capacities. To shorten the deceleration time, additional use of options such as a brake unit (FR-BU2) to absorb the braking energy or multifunction regeneration converter (FR-XC) is required.

◆ Power transfer mechanisms (reduction gear, belt, chain, etc.)

- Caution is required for the low-speed continuous operation of the motor with an oil lubricated gear box, transmission, reduction gear, etc. in the power transfer mechanism. Such an operation may degrade the oil lubrication and cause seizing. On the other hand, the high-speed operation at more than 60 Hz may cause problems with the noise of the power transfer mechanism, life, or insufficient strength due to centrifugal force, etc. Fully take necessary precautions.

◆ Instructions for overload operation

- When performing frequent starts/stops by the inverter, rise/fall in the temperature of the transistor element of the inverter will repeat due to a repeated flow of large current, shortening the life from thermal fatigue. Since thermal fatigue is related to the amount of current, the life can be increased by reducing current at locked condition, starting current, etc. Reducing current may extend the service life but may also cause torque shortage, which leads to a start failure. Adding a margin to the current can eliminate such a condition. For an induction motor, use an inverter of a higher capacity (up to two ranks for the ND rating). For a PM motor, use an inverter and PM motor of higher capacities.

Precautions on peripheral device selection

Selection and installation of molded case circuit breaker

Install a molded case circuit breaker (MCCB) on the power receiving side to protect the wiring at the inverter/the converter unit input side. Select an MCCB according to the inverter power supply side power factor, which depends on the power supply voltage, output frequency and load. Refer to **page 181**. Especially for a completely electromagnetic MCCB, a slightly large capacity must be selected since its operation characteristic varies with harmonic currents. (Check the reference material of the applicable breaker.) As an earth leakage circuit breaker, use the Mitsubishi Electric earth leakage circuit breaker designed for harmonics and surge suppression. (Refer to **page 179**.)
When installing a molded case circuit breaker on the inverter output side, contact the manufacturer of each product for selection.

Handling of the input side magnetic contactor (MC)

For the operation using external terminals (using terminal STF or STR), install the input-side magnetic contactor to prevent accidents due to automatic restart when the power is restored after power failures such as an instantaneous power failure, or for safety during maintenance works. Do not use this magnetic contactor for frequent starting/stopping of the inverter. (The switching life of the converter part is about 1 million times.) In the operation by parameter unit, the automatic restart after power restoration is not performed and the magnetic contactor cannot be used to start the motor. The input-side magnetic contactor can stop the motor. However, the regenerative brake of the inverter does not operate, and the motor coasts to a stop.

Handling of the output side magnetic contactor (MC)

- Switch the MC between the inverter and motor only when both the inverter and motor are at a stop. When the magnetic contactor is turned ON while the inverter is operating, overcurrent protection of the inverter and such will activate. When an MC is provided to switch to a commercial power supply, for example, it is recommended to use the commercial power supply-inverter switchover function **Pr.135 to Pr.139**.
- Do not install a magnetic contactor at the inverter's output side when using a PM motor.

Installation of thermal relay

In order to protect the motor from overheating, the inverter has an electronic thermal O/L relay. However, install an external thermal overcurrent relay (OCR) between the inverter and motors to operate several motors or a multi-pole motor with one inverter. In this case, set 0 A to the electronic thermal O/L relay setting of the inverter. For the external thermal overcurrent relay, determine the setting value in consideration of the current indicated on the motor's rating plate and the line-to-line leakage current. **(Refer to page 187.)**
Self cooling ability of a motor reduces in the low-speed operation. Installation of a thermal protector or a use of a motor with built-in thermistor is recommended.

Output side measuring instrument

When the inverter-to-motor wiring length is long, especially for the 400 V class, small-capacity models, the meters and CTs may generate heat due to line-to-line leakage current. Therefore, choose the equipment which has enough allowance for the current rating.
When measuring and displaying the output voltage and output current of the inverter, use of terminals AM and 5 output function of the inverter is recommended.

Disuse of power factor improving capacitor (power factor correction capacitor)

The power factor improving capacitor and surge suppressor on the inverter output side may be overheated or damaged by the harmonic components of the inverter output. Also, since an excessive current flows in the inverter to activate overcurrent protection, do not provide a capacitor and surge suppressor. To improve the power factor, use an AC reactor (on **page 150**), a DC reactor (on **page 151**), or a high power factor converter (on **page 168**).

Connection between the converter unit and the inverter

- Perform wiring so that the commands sent from the converter unit are transmitted to the inverter without fail. Incorrect connection may damage the converter unit and the inverter.
- For the wiring length, refer to the table below.

Total wiring length	**Across terminals P and P and terminals N and N**	50 m or lower
	Other signal cables	30 m or lower

- For the cable gauge of the cable across the main circuit terminals P/+ and N/- (P and P, N and N), refer to **page 182**.

Electrical corrosion of the bearing

When a motor is driven by the inverter, axial voltage is generated on the motor shaft, which may cause electrical corrosion of the bearing in rare cases depending on the wiring, load, operating conditions of the motor or specific inverter settings (high carrier frequency and EMC filter ON).
Contact your sales representative to take appropriate countermeasures for the motor.
The following shows examples of countermeasures for the inverter.

- Decrease the carrier frequency.
- Turn OFF the EMC filter.
- Provide a common mode choke on the output side of the inverter.*1
  (This is effective regardless of the EMC filter ON/OFF connector setting.)

*1 Recommended common mode choke: FT-3KM F series FINEMET® common mode choke cores manufactured by Proterial, Ltd.
FINEMET is a registered trademark of Proterial, Ltd.

◆ Cable gauge and wiring distance

If the wiring distance is long between the inverter and motor, during the output of a low frequency in particular, use a large cable gauge for the main circuit cable to suppress the voltage drop to 2% or less. (The table on **page 181** indicates a selection example for the wiring length of 20 m.)
Especially for long-distance wiring or wiring with shielded cables, the inverter may be affected by a charging current caused by stray capacitances of the wiring, leading to an incorrect activation of the overcurrent protective function. Refer to the maximum wiring length shown in the following table.
When multiple motors are connected, use the total wiring length shown in the table or shorter (100 m or shorter under vector control and PM sensorless vector control.)

Pr.72 setting (carrier frequency)	FR-A820-00046(0.4K), FR-A840-00023(0.4K)	FR-A820-00077(0.75K), FR-A840-00038(0.75K)	FR-A820-00105(1.5K) or higher, FR-A840-00052(1.5K) or higher
2 (2 kHz) or lower	300 m	500 m	500 m
3 (3 kHz) or higher	200 m	300 m	500 m

When the operation panel is installed away from the inverter and when the parameter unit is connected, use a recommended connection cable.
For the remote operation using analog signals, keep the control cable distance between the operation signal transmitter and the inverter to 30 m or less. Also, to prevent induction from other devices, keep the wiring away from the power circuits (main circuit and relay sequential circuit).
When the frequency setting is performed using the external potentiometer, not using the parameter unit, use a shielded or twisted cable as shown in the figure below. Connect the shield cable to terminal 5, not to the earth (ground).

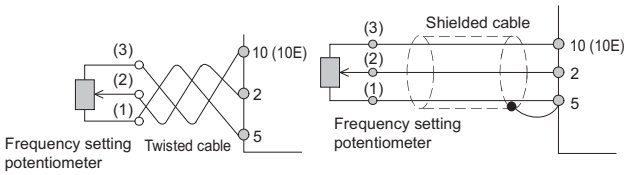

◆ Earth (ground)

When the inverter is set for the low acoustic noise operation, the leakage current increases compared to in the normal operation due to the high speed switching operation. Always earth (ground) the inverter, the converter unit, and the motor. Also, always use the earth (ground) terminal of the inverter/the converter unit for earthing (grounding). (Do not use a case or chassis.)

◆ Electromagnetic interference (EMI)

For the low acoustic noise operation with high carrier frequency, electromagnetic noise tends to increase. Take countermeasures by referring to the following examples. Depending on an installation condition, noise may affect the inverter also in the normal operation (initial status).

- Decrease the carrier frequency (**Pr.72**) setting to lower the EMI level.
- For countermeasures against the noise in AM radio broadcasting or malfunction of sensors, turn ON the EMC filter. (For the switching method, refer to the Instruction Manual.)
- For effective reduction of induction noise from the power cable of the inverter/the converter unit, secure the distance of 30 cm (at least 10 cm) from the power line and use a shielded twisted pair cable for the signal cable. Do not earth (ground) the shield, and connect the shield to a common terminal by itself.

EMI measure example

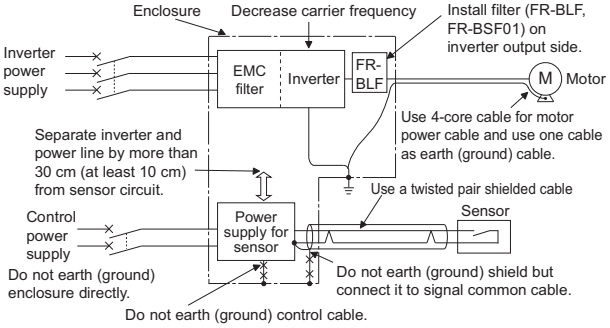

◆ Leakage current

Capacitance exists between the inverter/the converter unit I/O cables and other cables or the earth, and within the motor, through which a leakage current flows. Since its value depends on the static capacitance, carrier frequency, etc., low acoustic noise operation at the increased carrier frequency of the inverter will increase the leakage current. Therefore, take the following measures. Select the earth leakage circuit breaker according to its rated sensitivity current, independently of the carrier frequency setting.

◆ To-earth (ground) leakage currents

Type	Influence and countermeasure
Influence and countermeasure	• Leakage currents may flow not only into the power system of the inverter/converter unit but also into the other power systems through the earthing (grounding) cable, etc. These leakage currents may operate earth leakage circuit breakers and earth leakage relays unnecessarily. Measures • If the carrier frequency setting is high, decrease the **Pr.72 PWM frequency selection** setting. However, the motor noise increases. Selecting **Pr.240 Soft-PWM operation selection** makes the sound inoffensive. • By using earth leakage circuit breakers designed to suppress harmonics and surge voltage in the power system of the inverter and other devices, operation can be performed with the carrier frequency kept high (with low noise).
Transmission path	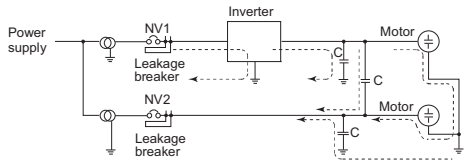

◆ Line-to-line leakage current

Type	Influence and countermeasure
Influence and countermeasure	• Line-to-line leakage current flows through the capacitance between the inverter/the converter unit output lines. • Harmonic component of the leaked current may cause unnecessary operation of an external thermal relay. Long wiring length (50 m or longer) for the 400V class small capacity models (7.5 kW or lower) will increase the rate of leakage current against the rated motor current. In such a case, an unnecessary operation of the external thermal relay may be more liable to occur. Measures • Use **Pr.9 Electronic thermal O/L relay**. • If the carrier frequency setting is high, decrease the **Pr.72 PWM frequency selection** setting. However, the motor noise increases. Selecting **Pr.240 Soft-PWM operation selection** makes the sound inoffensive. To protect motor securely without being subject to the influence of the line-to-line leakage current, direct detection of the motor temperature using a temperature sensor is recommended.
Transmission path	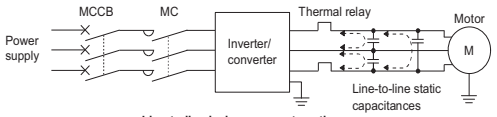

Line-to-line leakage currents path

◆ Harmonic Suppression Guidelines

Inverters have a converter section (rectifier circuit) and generate a harmonic current.
Harmonic currents flow from the inverter to a power receiving point via a power transformer. The Harmonic Suppression Guidelines was established to protect other consumers from these outgoing harmonic currents.
The three-phase 200 V input specifications 3.7 kW or lower were previously covered by the "Harmonic Suppression Guidelines for Household Appliances and General-purpose Products" and other models were covered by the "Harmonic Suppression Guidelines for Consumers Who Receive High Voltage or Special High Voltage". However, the general-purpose inverter has been excluded from the target products covered by the "Harmonic Suppression Guidelines for Household Appliances and General-purpose Products" in January 2004 and the "Harmonic Suppression Guideline for Household Appliances and General-purpose Products" was repealed on September 6, 2004.
All capacity and all models of general-purpose inverter used by specific consumers are now covered by the "Harmonic Suppression Guidelines for Consumers Who Receive High Voltage or Special High Voltage".

- "Harmonic Suppression Guidelines for Consumers Who Receive High Voltage or Special High Voltage"
  This guideline sets the maximum values of outgoing harmonic currents generated from a high-voltage or specially high-voltage receiving consumer who will install, add or renew harmonic generating equipment. If any of the maximum values is exceeded, this guideline requires that consumer to take certain suppression measures.

The users who are not subjected to the above guidelines do not need follow the guidelines, but the users are recommended to connect a DC reactor and an AC reactor as usual.
Compliance with the "Harmonic Suppression Guidelines for Consumers Who Receive High Voltage or Special High Voltage"

Input power	Target capacity	Measure
Three-phase 200 V	All capacities	Confirm the compliance with the "Harmonic Suppression Guidelines for Consumers Who Receive High Voltage or Special High Voltage" published in September 1994 by the Ministry of International Trade and Industry (the present Japanese Ministry of Economy, Trade and Industry). Take countermeasures if required. Use the following materials as reference to calculate the power supply harmonics. Reference materials • "Harmonic Suppression Measures of the General-purpose Inverter" January 2004, Japan Electrical Manufacturers' Association • "Calculation Method of Harmonic Current of the General-purpose Inverter Used by Specific Consumers" JEM-TR201 (Revised in December 2003), Japan Electrical Manufacturers' Association
Three-phase 400 V		

For compliance to the "Harmonic Suppression Guideline of the General-purpose Inverter (Input Current of 20A or Less) for Consumers Other Than Specific Consumers" published by JEMA

Input power	Target capacity	Measures
Three-phase 200 V	3.7 kW or lower	Connect the AC reactor or DC reactor recommended in the Catalogs and Instruction Manuals. Reference materials • "Harmonic Suppression Guideline of the General-purpose Inverter (Input Current of 20A or Less)" JEM-TR226 (Published in December 2003), Japan Electrical Manufacturers' Association

◆ Calculation of outgoing harmonic current

Outgoing harmonic current = fundamental wave current (value converted from received power voltage) × operation ratio × harmonic content

- Operation ratio: Operation ratio = actual load factor × operation time ratio during 30 minutes
- Harmonic content: Found in the table below.

- Harmonic contents (values when the fundamental wave current is 100%)

Reactor	5th	7th	11th	13th	17th	19th	23rd	25th
Not used	65	41	8.5	7.7	4.3	3.1	2.6	1.8
Used (AC side)	38	14.5	7.4	3.4	3.2	1.9	1.7	1.3
Used (DC side)	30	13	8.4	5.0	4.7	3.2	3.0	2.2
Used (AC, DC sides)	28	9.1	7.2	4.1	3.2	2.4	1.6	1.4

- Rated capacities and outgoing harmonic currents when driven by inverter

Applied motor (kW)	Fundamental wave current (A)		Fundamental wave current converted from 6.6 kV (mA)	Rated capacity (kVA)	Outgoing harmonic current converted from 6.6 kV (mA) (No reactor, 100% operation ratio)							
	200 V	400 V			5th	7th	11th	13th	17th	19th	23rd	25th
0.4	1.61	0.81	49	0.57	31.85	20.09	4.165	3.773	2.107	1.519	1.274	0.882
0.75	2.74	1.37	83	0.97	53.95	34.03	7.055	6.391	3.569	2.573	2.158	1.494
1.5	5.50	2.75	167	1.95	108.6	68.47	14.20	12.86	7.181	5.177	4.342	3.006
2.2	7.93	3.96	240	2.81	156.0	98.40	20.40	18.48	10.32	7.440	6.240	4.320
3.7	13.0	6.50	394	4.61	257.1	161.5	33.49	30.34	16.94	12.21	10.24	7.092
5.5	19.1	9.55	579	6.77	376.1	237.4	49.22	44.58	24.90	17.95	15.05	10.42
7.5	25.6	12.8	776	9.07	504.4	318.2	65.96	59.75	33.37	24.06	20.18	13.97
11	36.9	18.5	1121	13.1	728.7	459.6	95.29	86.32	48.20	34.75	29.15	20.18
15	49.8	24.9	1509	17.6	980.9	618.7	128.3	116.2	64.89	46.78	39.24	27.16
18.5	61.4	30.7	1860	21.8	1209	762.6	158.1	143.2	79.98	57.66	48.36	33.48
22	73.1	36.6	2220	25.9	1443	910.2	188.7	170.9	95.46	68.82	57.72	39.96
30	98.0	49.0	2970	34.7	1931	1218	252.5	228.7	127.7	92.07	77.22	53.46
37	121	60.4	3660	42.8	2379	1501	311.1	281.8	157.4	113.5	95.16	65.88
45	147	73.5	4450	52.1	2893	1825	378.3	342.7	191.4	138.0	115.7	80.10
55	180	89.9	5450	63.7	3543	2235	463.3	419.7	234.4	169.0	141.7	98.10

Applied motor (kW)	Fundamental wave current (A)		Fundamental wave current converted from 6.6 kV (mA)	Rated capacity (kVA)	Outgoing harmonic current converted from 6.6 kV (mA) (With a DC reactor, 100% operation ratio)							
	200 V	400 V			5th	7th	11th	13th	17th	19th	23rd	25th
75	245	123	7455	87.2	2237	969	626	373	350	239	224	164
90	293	147	8909	104	2673	1158	748	445	419	285	267	196
110	357	179	10848	127	3254	1410	911	542	510	347	325	239
132	-	216	13091	153	3927	1702	1100	655	615	419	393	288
160	-	258	15636	183	4691	2033	1313	782	735	500	469	344
220	-	355	21515	252	6455	2797	1807	1076	1011	688	645	473
250	-	403	24424	286	7327	3175	2052	1221	1148	782	733	537
280	-	450	27273	319	8182	3545	2291	1364	1282	873	818	600
315	-	506	30667	359	9200	3987	2576	1533	1441	981	920	675
355	-	571	34606	405	10382	4499	2907	1730	1627	1107	1038	761
400	-	643	38970	456	11691	5066	3274	1949	1832	1247	1169	857
450	-	723	43818	512	13146	5696	3681	2191	2060	1402	1315	964
500	-	804	48727	570	14618	6335	4093	2436	2290	1559	1462	1072
560	-	900	54545	638	16364	7091	4582	2727	2564	1746	1636	1200
630	-	1013	61394	718	18418	7981	5157	3070	2886	1965	1842	1351

- Conversion factors

Classification	Circuit type		Conversion coefficient Ki
3	Three-phase bridge (Capacitor smoothing)	Without reactor	K31 = 3.4
		With reactor (AC side)	K32 = 1.8
		With reactor (DC side)	K33 = 1.8
		With reactors (AC, DC sides)	K34 = 1.4
5	Self-excitation three-phase bridge	When a high power factor converter is used	K5 = 0

Compatible Motors

● List of applicable inverter models by rating (motor capacity → inverter model)

The following table shows examples for selecting the standard model.
For the combinations within the thick boarders, always connect a DC reactor (FR-HEL), which is available as an option.

◆ 200 V class (model: FR-A820-[])

Motor capacity (kW)*1	DC reactor	SLD (superlight load)			LD (light load)			ND (normal load, initial value)			HD (heavy load)		
	FR-HEL-[]	Model		Rated current (A)	Model		Rated current (A)	Model		Rated current (A)	Model		Rated current (A)
0.2	0.4K*2	0.4K	00046	4.6	0.4K	00046	4.2	0.4K	00046	3	0.4K	00046	1.5
0.4	0.4K										0.75K	00077	3
0.75	0.75K							0.75K	00077	5	1.5K	00105	5
1.5	1.5K	0.75K	00077	7.7	0.75K	00077	7	1.5K	00105	8	2.2K	00167	8
2.2	2.2K	1.5K	00105	10.5	1.5K	00105	9.6	2.2K	00167	11	3.7K	00250	11
3.7	3.7K	2.2K	00167	16.7	2.2K	00167	15.2	3.7K	00250	17.5	5.5K	00340	17.5
5.5	5.5K	3.7K	00250	25	3.7K	00250	23	5.5K	00340	24	7.5K	00490	24
7.5	7.5K	5.5K	00340	34	5.5K	00340	31	7.5K	00490	33	11K	00630	33
11	11K	7.5K	00490	49	7.5K	00490	45	11K	00630	46	15K	00770	46
15	15K	11K	00630	63	11K	00630	58	15K	00770	61	18.5K	00930	61
18.5	18.5K	15K	00770	77	15K	00770	70.5	18.5K	00930	76	22K	01250	76
22	22K	18.5K	00930	93	18.5K	00930	85	22K	01250	90	30K	01540	90
30	30K	22K	01250	125	22K	01250	114	30K	01540	115	37K	01870	115
37	37K	30K	01540	154	30K	01540	140	37K	01870	145	45K	02330	145
45	45K	37K	01870	187	37K	01870	170	45K	02330	175	55K	03160	175
55	55K	45K	02330	233	45K	02330	212	55K	03160	215	75K	03800	215
75	75K	55K	03160	316	55K	03160	288	75K	03800	288	90K	04750	288
90	90K	75K	03800	380	75K	03800	346	90K	04750	346	-	-	-
110	110K				90K	04750	432	-	-	-	-	-	-
132	110K*3	90K	04750	475	-	-	-	-	-	-	-	-	-

◆ 400 V class (model: FR-A840-[])

Motor capacity (kW)*1	DC reactor	SLD (superlight load)			LD (light load)			ND (normal load, initial value)			HD (heavy load)		
	FR-HEL-[]	Model		Rated current (A)	Model		Rated current (A)	Model		Rated current (A)	Model		Rated current (A)
0.2	H0.4K*2	0.4K	00023	2.3	0.4K	00023	2.1	0.4K	00023	1.5	0.4K	00023	0.8
0.4	H0.4K										0.75K	00038	1.5
0.75	H0.75K							0.75K	00038	2.5	1.5K	00052	2.5
1.5	H1.5K	0.75K	00038	3.8	0.75K	00038	3.5	1.5K	00052	4	2.2K	00083	4
2.2	H2.2K	1.5K	00052	5.2	1.5K	00052	4.8	2.2K	00083	6	3.7K	00126	6
3.7	H3.7K	2.2K	00083	8.3	2.2K	00083	7.6	3.7K	00126	9	5.5K	00170	9
5.5	H5.5K	3.7K	00126	12.6	3.7K	00126	11.5	5.5K	00170	12	7.5K	00250	12
7.5	H7.5K	5.5K	00170	17	5.5K	00170	16	7.5K	00250	17	11K	00310	17
11	H11K	7.5K	00250	25	7.5K	00250	23	11K	00310	23	15K	00380	23
15	H15K	11K	00310	31	11K	00310	29	15K	00380	31	18.5K	00470	31
18.5	H18.5K	15K	00380	38	15K	00380	35	18.5K	00470	38	22K	00620	38
22	H22K	18.5K	00470	47	18.5K	00470	43	22K	00620	44	30K	00770	44
30	H30K	22K	00620	62	22K	00620	57	30K	00770	57	37K	00930	57
37	H37K	30K	00770	77	30K	00770	70	37K	00930	71	45K	01160	71
45	H45K	37K	00930	93	37K	00930	85	45K	01160	86	55K	01800	86
55	H55K	45K	01160	116	45K	01160	106	55K	01800	110	75K	02160	110
75	H75K	55K	01800	180	55K	01800	144	75K	02160	144	90K	02600	144
90	H90K				75K	02160	180	90K	02600	180	110K	03250	180
110	H110K	75K	02160	216	90K	02600	216	110K	03250	216	132K	03610	216
132	H132K	90K	02600	260	110K	03250	260	132K	03610	260	160K	04320	260
160	H160K	110K	03250	325	132K	03610	325	160K	04320	325	185K	04810	325
185	H185K	132K	03610	361	160K	04320	361	185K	04810	361	220K	05470	361
220	H220K	160K	04320	432	185K	04810	432	220K	05470	432	250K	06100	432
250	H250K	185K	04810	481	220K	05470	481	250K	06100	481	280K	06830	481
280	H280K	220K	05470	547	250K	06100	547	280K	06830	547	-	-	-
315	H315K	250K	06100	610	280K	06830	610	-	-	-	-	-	-
355	H355K	280K	06830	683	-	-	-	-	-	-	-	-	-

*1 Indicates the maximum capacity applicable with the Mitsubishi Electric 4-pole standard motor.
*2 The power factor may be slightly lower.
*3 The FR-HEL-110K supports the 200 V class 132 kW motor.

◆ Overload current rating

SLD	110% 60 s, 120% 3 s (inverse-time characteristics) at surrounding air temperature of 40°C
LD	120% 60 s, 150% 3 s (inverse-time characteristics) at surrounding air temperature of 50°C
ND	150% 60 s, 200% 3 s (inverse-time characteristics) at surrounding air temperature of 50°C
HD	200% 60 s, 250% 3 s (inverse-time characteristics) at surrounding air temperature of 50°C

High-performance energy-saving motor superline premium series SF-PR

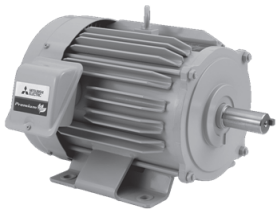

We have released the superline premium series SF-PR models compatible with the Top Runner Standard in Japan, which is equivalent with IE3 premium efficiency for three-phase motors, and with the Energy Independence and Security Act (EISA) in the United States.
The SF-PR has achieved the efficiency class IE3 with the same dimensions as those of conventional models using our unique technology of the steel plate frame and new core materials.
It maintains interchangeability with our standard efficiency motor SF-JR and easy replacement becomes possible.
By adopting a high-efficiency motor, energy savings in plant facilities and reduction of electricity consumption are expected, as well as the effects of recovering the investment cost.

◆ One motor conforms to the power supply in Japan and the United States.

- The SF-PR series conform to the Top Runner Standard of the "Act on the Rational Use of Energy (energy saving law)" started on April 1, 2015.
- The 230 V 60 Hz motor also conforms to the Energy Independence and Security Act (EISA).

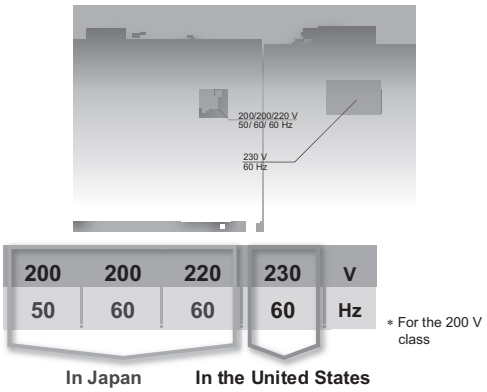

◆ Interchangeable installation size

- Replacement can be smoothly performed because the installation size (frame number) is compatible with our standard efficiency motor SF-JR series.
- It is possible to use a power distribution control equipment (thermal relay and breaker), which is the same as a conventional model.

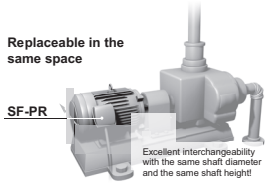

∗1 For the frame number 180 LD or higher and some models of the 6-pole product, the total length or diametrical dimension is greatly different.
∗2 The frame number is different from 1.5 kW6P (112M), 2.2 kW6P(132S) of the SF-HR models.
∗3 When replacing the SF-JR to the SF-PR, it is required to consider upgrading the contactor to secure the same electric durability as using the SF-JR because the electric durability of the contactor may reduce by about 30%. Besides, when replacing the SF-JR to the SF-PR, the existing thermal relay may trip depending on the operating conditions (long starting time). As a countermeasure, consider "Adjusting the heater set value of the thermal" or "Adopting the thermal with a saturated reactor ", etc.
∗4 If the breaker NF400-SW manufactured by Mitsubishi Electric is used with the 55 kW motor, change the breaker. (Change the rated current of the breaker NF400-SW from 300 A to 350 A.)

◆ Introduction effects of the superline premium series SF-PR

The SF-PR motor conforms to the Top Runner Standard (IE3 equivalent), which remarkably reduces its operation cost (electricity charges) and greatly contributes minimization of TCO (Total Cost Ownership).

- Trial calculation example of an annual saved sum of money (at upgrading the motor from energy-efficiency class IE1 to IE3) Motor with 4-poles 200 V50 Hz

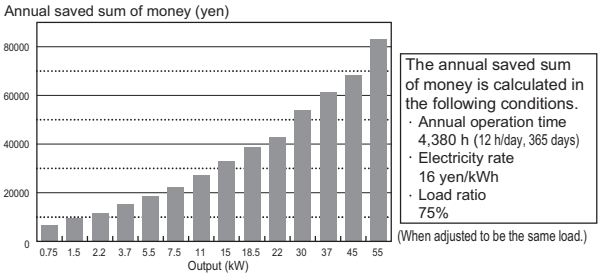

- Economic efficiency on an energy saving effect

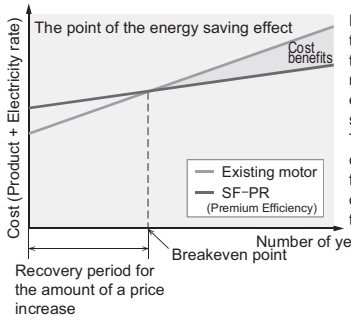

Reduction in the electricity charges through the energy saving enables the investment cost to be recovered, and after that, the energy saving effect will bring some profit through power saving. The annual saved sum of money can be calculated according to the following formula. The longer operation time in an application, the more money can be saved.

<Calculation formula>

$$\text{Output (kW)} \times \left(\frac{100}{\text{Efficiency of current motor (\%)}} - \frac{100}{\text{Efficiency of SF-PR model (\%)}} \right) \times \text{Number of motors} \times \text{Number of hours of use (h/day)} \times \text{Number of days of operation (day/year)} \times \text{Electricity rate (yen/kWh)}$$

When replacing our standard motor SF-JR with the SF-PR on the ventilation fan in plant

<Condition>
Type : 11 kW 4P 200 V 50 Hz 75% load
Units : 10 units
Operation time : 12 h/day 365 day/year
Electricity rate: 16 yen/kWh

Reduced cost of about 350,000 yen per year

Trial calculation results in replacing the SF-JR with the SF-PR with improved efficiency by 5% under the same conditions of the load factor, operation time, and electricity charges, etc.

◆ Lineup

●Model

S F - P R V O B - K R

Symbol	Structure
S	Superline series

Symbol	Enclosure type
F	Totally enclosed fan-cooled

Symbol	Series
PR	Premium series Steel plate frame

Symbol	Installation
None	Foot mounting type
V	Vertical type
F	Flange type

Symbol	Classification
None	Indoor type (IP44)
O	Outdoor type (IP44)
P	Dust-proof and waterproof type(IP55)

Symbol	With or without brake
None	Without brake
B	With brake

Symbol	Country code
None	Japan and the U.S.A.
UL	US UL standard
KR	Korea
EU	Europe
CN	China

●Available models

Type		Totally-enclosed fan-cooled type														
		Foot mounting type			Vertical type			Flange type			Outdoor type			Dustproof/waterproof type		
Model		SF-PR			SF-PRV			SF-PRF			SF-PRO			SF-PRP		
Number of poles		2P	4P	6P	2P	4P	6P	2P	4P	6P	2P	4P	6P	2P	4P	6P
Output (kW)	0.75	•	•	•	•	•	•	•	•	•	•	•	•	•	•	•
	1.5	•	•	•	•	•	•	•	•	•	•	•	•	•	•	•
	2.2	•	•	•	•	•	•	•	•	•	•	•	•	•	•	•
	3.7	•	•	•	•	•	•	•	•	•	•	•	•	•	•	•
	5.5	•	•	•	•	•	•	•	•	•	•	•	•	•	•	•
	7.5	•	•	•	•	•	•	•	•	•	•	•	•	•	•	•
	11	•	•	•	•	•	•	•	•	•	•	•	•	•	•	•
	15	•	•	•	•	•	•	•	•	•	•	•	•	•	•	•
	18.5	•	•	•	•	•	•	•	•	•	•	•	•	•	•	•
	22	•	•	•	•	•	•	•	•	•	•	•	•	•	•	•
	30	•	•	•	•	•	•	•	•	•	•	•	•	•	•	•
	37	•	•	•	•	•	•	•	•	•	•	•	•	•	•	•
	45	•	•	•	•	•	•	•	•	–	•	•	•	•	•	•
	55	•	•	–	•	•	–	–	–	–	•	•	–	•	•	–

•: Available model

• The vertical type and the flange type are also available for the outdoor type and the dustproof/waterproof type.

● The SF-PR best matches Mitsubishi Electric inverters

◆ Enabling a constant-torque operation in the low-speed range (expanding the constant-torque range)

- Combining with the standard motor SF-PR enables a constant-torque operation in the low-speed range.
- The SF-PR has superior performance to the SF-HRCA.
- The 400 V class motors are insulation-enhanced motors as standard.

◆ Combination with Advanced magnetic flux vector control

- Enables a constant-torque operation down to 0.5 Hz in a super low-speed range.
  Expanding the constant-torque continuous operation range enables 0.5 to 60 Hz (1: 120) operation.

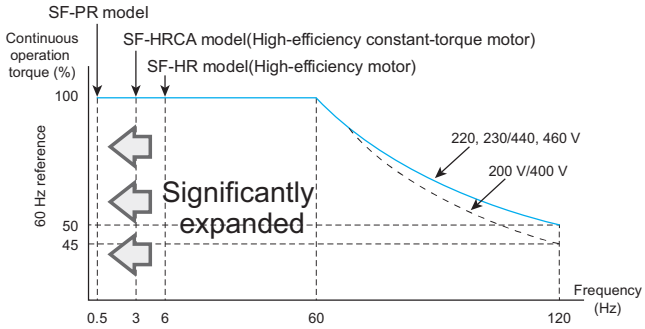

◆ Combination with V/F control

- Enables a constant-torque operation down to 6 Hz in a low-speed range.
  Expanding the constant-torque continuous operation range enables 6 to 60 Hz (1: 10) operation.

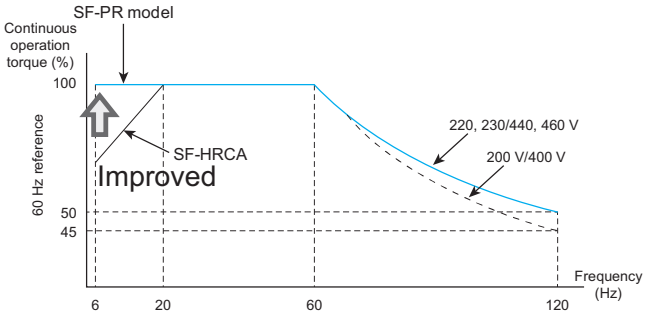

60 Hz torque reference indicates that the rated motor torque is 100% during 60 Hz operation.

◆ Motor torque

The following shows torque characteristics of the high-performance, energy-saving motor (SF-PR, 4-pole) in combination with an inverter with the ND or HD rating. The overload capacity decreases for the LD or SLD rating. Observe the specified range of the inverter.

◆ Maximum short-time torque

Real sensorless vector control	V/F control
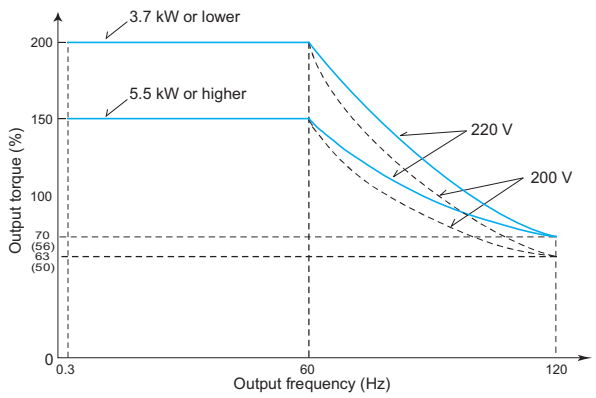	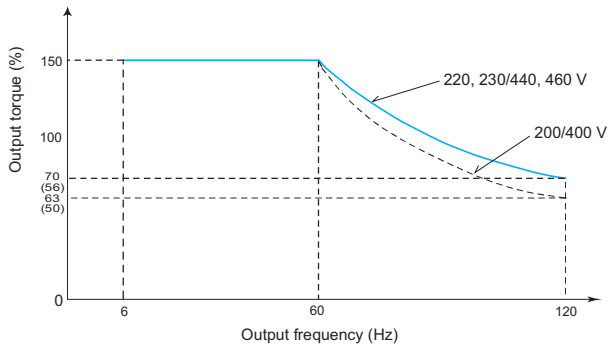

The values in parentheses are applicable to 1.5 kW and 2.2 kW.

The values in parentheses are applicable to 2.2 kW.

◆ Continuous torque

Real sensorless vector control	V/F control
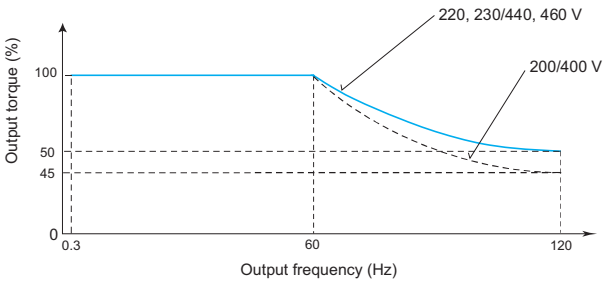	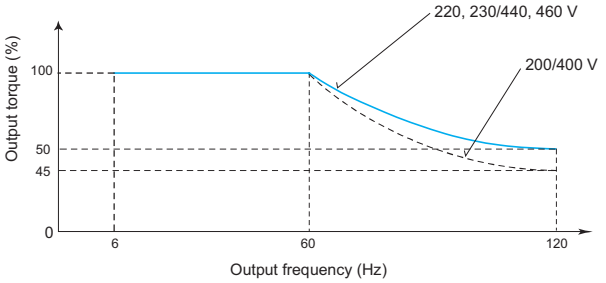

Application to standard motors

◆ Motor loss and temperature rise

The motor operated by the inverter has a limit on the continuous operating torque since it is slightly higher in temperature rise than the one operated by a commercial power supply. At a low speed, reduce the output torque of the motor since the cooling effect decreases. When 100% torque is needed continuously at low speed, consider using a constant-torque motor.

◆ Torque characteristic

The motor operated by the inverter may be less in motor torque (especially starting torque) than the one driven by the commercial power supply. It is necessary to fully check the load torque characteristic of the machine.

◆ Vibration

The machine-installed motor operated by the inverter may be slightly greater in vibration than the one driven by the commercial power supply. The possible causes of vibration are as follows.

- Vibration due to imbalance of the rotator itself including the machine
- Resonance due to the natural oscillation of the mechanical system. Caution is required especially when the machine used at constant speed is operated at variable speed. The frequency jump function allows resonance points to be avoided during operation. (During acceleration/deceleration, the frequency within the setting range is passed through.) An effect is also produced if **Pr.72 PWM frequency selection** is changed. When a two-pole motor is operated at higher than 60 Hz, caution should be taken since such an operation may cause abnormal vibration.

◆ Motor torque

When the Mitsubishi Electric standard squirrel cage motor (SF-JR, 4-pole) and inverter of the same capacity are used, the torque characteristics are as shown below. It is assumed that the motor is used in combination with an inverter with the ND or HD rating. The overload capacity decreases when the LD or SLD rating is selected. Observe the specified range of the inverter.

◆ Maximum short-time torque

	60 Hz torque reference	50 Hz torque reference
Real sensorless vector control	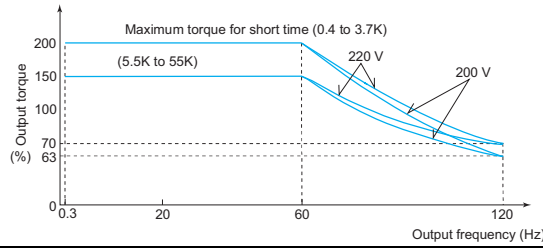	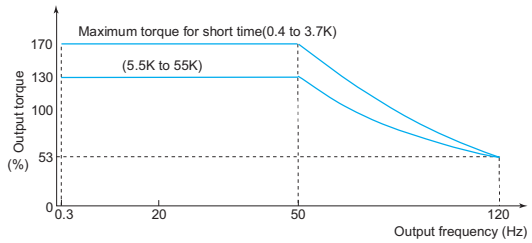
V/F control	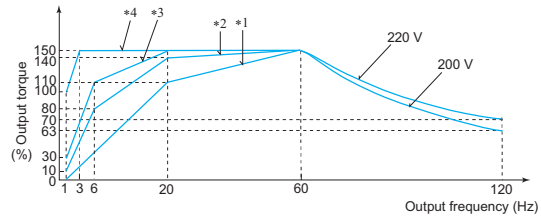	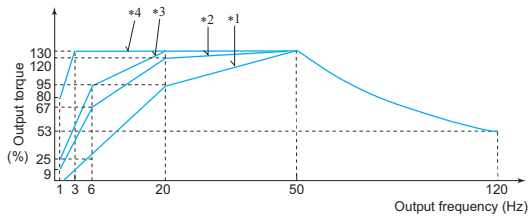

*1 Torque boost minimum (0%)
*2 Torque boost standard (initial value)
*3 Torque boost large
10%: FR-A820-00046(0.4K), FR-A820-00077(0.75K), FR-A840-00023(0.4K), FR-A840-00038(0.75K)
7%: FR-A820-00105(1.5K) to FR-A820-00250(3.7K), FR-A840-00052(1.5K) to FR-A840-00126(3.7K)
6%: FR-A820-00340(5.5K), FR-A820-00490(7.5K), FR-A840-00170(5.5K), FR-A840-00250(7.5K)
4%: FR-A820-00630(11K) or higher, FR-A840-00310(11K) or higher
*4 Torque boost adjustment (3.7 kW or lower)

- The maximum short-time torque indicates the maximum torque characteristics within 60 s.
- Under Real sensorless vector control, 200% (150%) torque (60 Hz torque reference) is output at 0.3 Hz operation.
- A 60 Hz torque reference indicates that the rated torque of the motor running at 60 Hz is 100%, and a 50 Hz torque reference indicates that the rated torque of the motor running at 50 Hz is 100%
- Under V/F control, all of SF-JR 2-pole, 4-pole, and 6-pole motors have the same torque characteristics.

◆ Continuous torque (Real sensorless vector control)

60 Hz torque reference	50 Hz torque reference
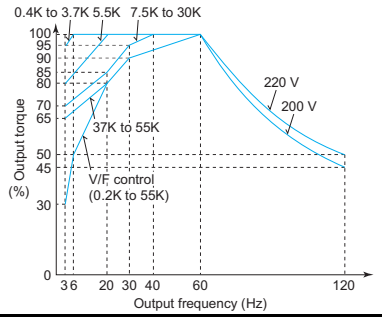	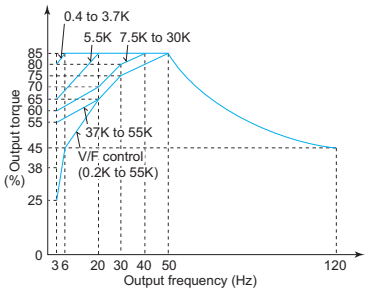

- A general-purpose squirrel cage motor must be used at lower continuous operating torque in rated operation as shown in the chart since the cooling capability of the fan installed on the rotor reduces at a lower speed. (Instantaneous torque occurs.)
- The toque with 200 or 220 V at 60 Hz or 200 V at 50 Hz in the chart indicates a motor torque reference (base frequency set in **Pr.3** of the inverter) and is not the frequency of the power supply. In a 50 Hz power supply area, the 60 Hz setting can be set.
- When continuously operating a motor with the 50 Hz torque reference setting, set the load torque to 85% or lower.

Application to constant-torque motors

SF-HRCA type

- Continuous operation even at low speed of 0.3 Hz is possible (when using Real sensorless vector control).
  For the 37 kW or lower (except for 22 kW), load torque is not needed to be reduced even at a low speed and constant torque (100% torque) continuous operation is possible within the range of speed ratio 1/20 (3 to 60 Hz).
  (The characteristic of motor running at 60 Hz or higher is that output torque is constant.)
- Installation size is the same as that of the standard motor.
- Note that operation characteristic in the chart below cannot be obtained if V/F control is used.

Standard specifications (indoor type)

Output (kW)	Number of poles	Frequency range	Common specification
0.4	4	3 to 120 Hz	Base frequency 60 Hz • Rotation direction (CCW) Counterclockwise when viewed from the shaft end • Lead wire 3.7 kW or lower: 3 wires 5.5 kW or higher: 6 or 12 wires • Surrounding air temperature: 40°C or lower The protective structure is IP44.
0.75			
1.5			
2.2			
3.7			
5.5			
7.5			
11		3 to 100 Hz	
15			
18.5			
22			
30			
37		3 to 65 Hz	
45			
55			

Motor torque

It is assumed that the motor is used in combination with an inverter with the ND or HD rating. The overload capacity decreases when the LD or SLD rating is selected. Observe the specified range of the inverter.

Continuous rated range of use (Real sensorless vector control)

60 Hz torque reference (when the inverter is 0.4 kW to 7.5 kW)

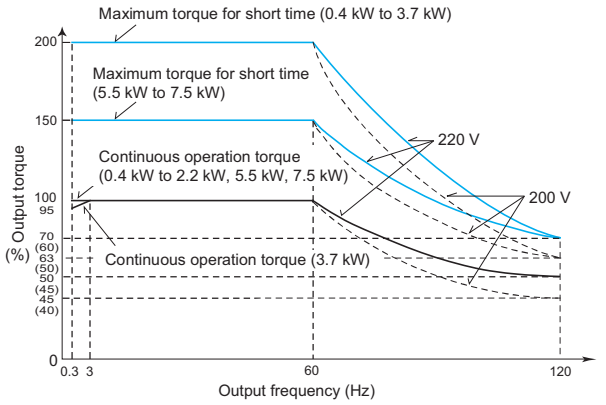

Values in parenthesis apply to the 0.4 kW to 0.75 kW

60 Hz torque reference (when the inverter is 11 kW to 22 kW)

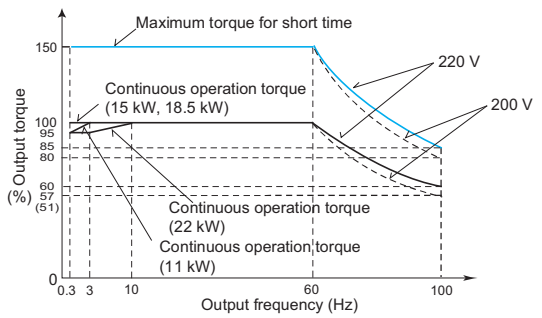

Values in parenthesis apply to the 22 kW

60 Hz torque reference (when the inverter is 30 kW)

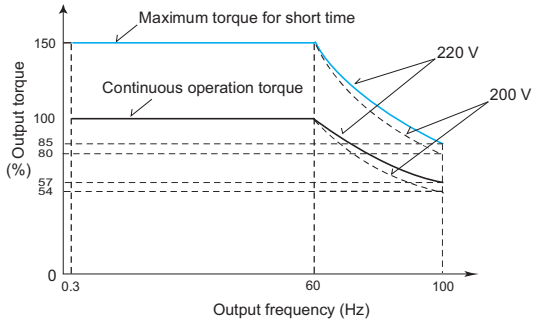

60 Hz torque reference (when the inverter is 37 kW to 55 kW)

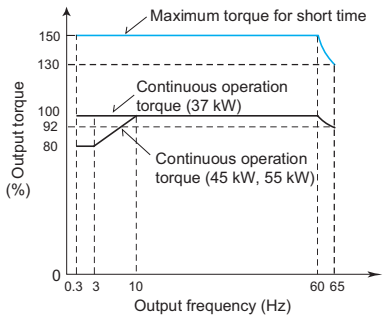

The maximum short-time torque indicates the maximum torque characteristics within 60 s.
For the motor constant under Real sensorless vector control, please contact your sales representative.

● Application to vector control dedicated motors (SF-V5RU) (55 kW or lower)

For performing vector control, the FR-A8AP/FR-A8TP (vector control compatible option) is required.
When the FR-A8TP is not used, a 12/24 VDC power supply is required as the power supply for the encoder of the SF-V5RU. (When the FR-A8TP is used, the 24 V power supply of the FR-A8TP can be used for the encoder of the SF-V5RU.)

◆ Motor torque

When the vector control dedicated motor (SF-V5RU) and inverter are used, the torque characteristics are as shown below.
It is assumed that the motor is used in combination with an inverter with the ND or HD rating. The overload capacity decreases when the LD or SLD rating is selected. Observe the specified range of the inverter.

- SF-V5RU

Rated speed 1500 r/min series

<1.5 to 22 (kW)>

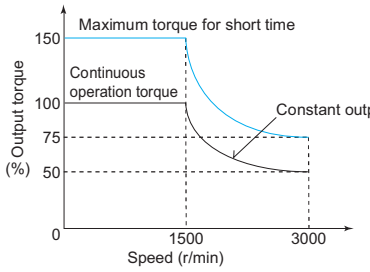

<30 to 55 (kW)>

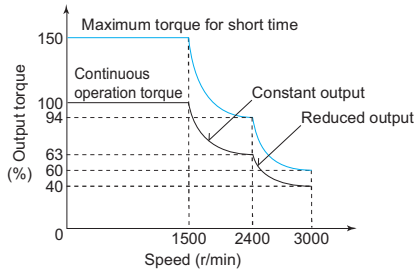

- SF-V5RU1, 3, and 4

1000 r/min torque reference (speed ratio 1:2)

<1.5 to 37 (kW)>

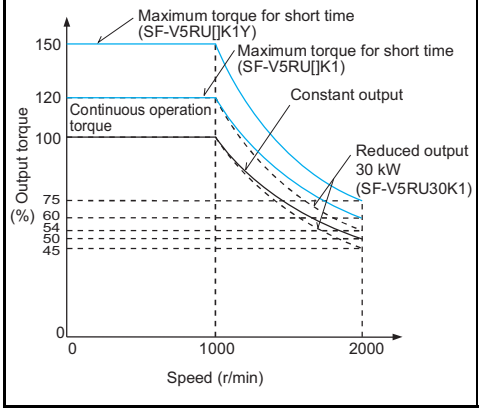

1000 r/min torque reference (speed ratio 1:3)

<1.5 to 30 (kW)>

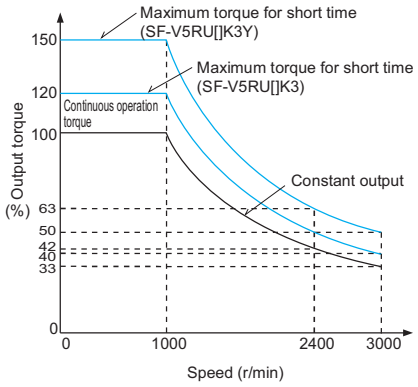

500 r/min torque reference (speed ratio 1:4)

<1.5 to 15 (kW)>

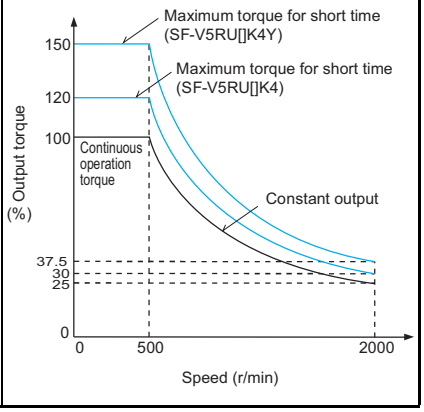

- The maximum rotation speed of the SF-V5RU-55kW and SF-V5RU3-30kW is 2400 r/min.
- The SF-V5RU-3.7kW or lower can be operated with the maximum rotation speed of 3600 r/min. For the use of those motors, please contact your sales representative.
- The maximum rotation speed of motors with a brake is 1800 r/min.
- The maximum short-time torque of the SF-V5RU[]K1, SF-V5RU[]K3, and SF-V5RU[]K4 is 120%.
  As the motor compatible with the maximum short-time torque of 150%, specify the SF-V5RU[]K1Y, SF-V5RU[]K3Y, or SF-V5RU[]K4Y.

◆ Motor model

SF-V5RU [F] [H] [5K] [1] [B] [T] [Y]

Symbol	Structure
None	Horizontal type
F	Flange type

Symbol	Structure
None	200 V class
H	400 V class

Symbol	Output (kW)	Symbol	Output (kW)
1K	1.5	18K	18.5
2K	2.2	22K	22
3K	3.7	30K	30
5K	5.5	37K	37
7K	7.5	45K	45
11K	11	55K	55
15K	15		

Symbol	Rated speed (r/min)	Maximum speed (r/min)
None	1500	3000
1	1000	2000
3	1000	3000
4	500	2000

Symbol	Electromagnetic brake
None	Without
B	With *1

Symbol	Protective device
None	With thermal protector
T	With thermistor *2

Symbol	Permissible load
None	120% 60 s
Y	150% 60 s

*1 Since a brake power device is a stand-alone, install it inside the enclosure. (This device should be arranged at the customer side.)
*2 To use the thermistor function of the thermistor-equipped motor SF-V5RU [][][][] T, the plug-in option (FR-A8AZ) is required additionally.

◆ Model lineup (●: Available model, -: Not available)

• Rated speed: 1500 r/min (4 poles)

Model	Standard type	Rated output (kW)	1.5	2.2	3.7	5.5	7.5	11	15	18.5	22	30	37	45	55
		Frame number	90L	100L	112M	132S	132M	160M	160L	180M	180M	200L	200L	200L	225S
Standard horizontal type	SF-V5RU(H)[]		●	●	●	●	●	●	●	●	●	●	●	●	●
Flange type	SF-V5RUF(H)[]		●	●	●	●	●	●	●	●	●	●	●	●	-
Standard horizontal type with brake	SF-V5RU(H)[]B		●	●	●	●	●	●	●	●	●	●	●	●	●
Flange type with brake	SF-V5RUF(H)[]B		●	●	●	●	●	●	●	-	-	-	-	-	-

• Rated speed: 1000 r/min (4 poles), maximum speed: 2000 r/min, speed ratio 1:2

Model	Standard type	Rated output (kW)	1.5	2.2	3.7	5.5	7.5	11	15	18.5	22	30	37
		Frame number	100L	112M	132S	132M	160M	160L	180M	180L	200L	200L	225S
Standard horizontal type	SF-V5RU(H)[]1(Y)		●	●	●	●	●	●	●	●	●	●	●
Flange type	SF-V5RUF(H)[]1(Y)		●	●	●	●	●	●	●	●	●	●	-
Standard horizontal type with brake	SF-V5RU(H)[]1B(Y)		●	●	●	●	●	●	●	●	●	●	●
Flange type with brake	SF-V5RUF(H)[]1B(Y)		●	●	●	●	●	●	-	-	-	-	-

• Rated speed: 1000 r/min (4 poles), maximum speed: 3000 r/min, speed ratio 1:3

Model	Standard type	Rated output (kW)	1.5	2.2	3.7	5.5	7.5	11	15	18.5	22	30
		Frame number	112M	132S	132M	160M	160L	180M	180L	200L	200L	225S
Standard horizontal type	SF-V5RU(H)[]3(Y)		●	●	●	●	●	●	●	●	●	●
Flange type	SF-V5RUF(H)[]3(Y)		●	●	●	●	●	●	●	●	●	-
Standard horizontal type with brake	SF-V5RU(H)[]3B(Y)		●	●	●	●	●	●	●	●	●	●
Flange type with brake	SF-V5RUF(H)[]3B(Y)		●	●	●	●	●	-	-	-	-	-

• Rated speed: 500 r/min (4 poles), maximum speed: 2000 r/min, speed ratio 1:4

Model	Standard type	Rated output (kW)	1.5	2.2	3.7	5.5	7.5	11	15
		Frame number	132M	160M	160L	180L	200L	225S	225S
Standard horizontal type	SF-V5RU(H)[]4(Y)		●	●	●	●	●	●	●
Flange type	SF-V5RUF(H)[]4(Y)		●	●	●	●	●	-	-
Standard horizontal type with brake	SF-V5RU(H)[]4B(Y)		●	●	●	●	●	●	●
Flange type with brake	SF-V5RUF(H)[]4B(Y)		●	●	●	-	-	-	-

Since motors with frame No. 250 or higher, 400 V class, speed ratio 1:4 specifications are available as special products, please contact your sales representative.

◆ Combination with the SF-V5RU1, 3, 4, SF-THY and inverter

When using the SF-V5RU1, 3, or 4(Y), always set **Pr.83 Rated motor voltage** and perform the offline auto tuning according to the Instruction Manual and additional materials, which are enclosed with the motor, and the Instruction Manual of the inverter.

	SF-V5RU[]1 (1:2)			SF-V5RU[]3 (1:3)			SF-V5RU[]4 (1:4)		
Voltage	200 V class								
Rated speed	1000 r/min			1000 r/min			500 r/min		
Base frequency	33.33 Hz			33.33 Hz			16.6 Hz		
Maximum speed	2000 r/min			3000 r/min			2000 r/min		
Motor capacity	Motor frame number	Motor model	Inverter model FR-A820-[] (ND rating)*4	Motor frame number	Motor model	Inverter model FR-A820-[] (ND rating)*4	Motor frame number	Motor model	Inverter model FR-A820-[] (ND rating)*4
1.5 kW	100L	SF-V5RU1K1(Y)	00167(2.2K)	112M	SF-V5RU1K3(Y)	00167(2.2K)	132M	SF-V5RU1K4(Y)	00167(2.2K)
2.2 kW	112M	SF-V5RU2K1(Y)	00240(3.7K)	132S	SF-V5RU2K3(Y)	00240(3.7K)	160M	SF-V5RU2K4(Y)	00240(3.7K)
3.7 kW	132S	SF-V5RU3K1(Y)	00340(5.5K)	132M	SF-V5RU3K3(Y)	00340(5.5K)	160L	SF-V5RU3K4*3	00490(7.5K)
5.5 kW	132M	SF-V5RU5K1(Y)	00490(7.5K)	160M	SF-V5RU5K3(Y)	00490(7.5K)	180L	SF-V5RU5K4(Y)	00490(7.5K)
7.5 kW	160M	SF-V5RU7K1(Y)	00630(11K)	160L	SF-V5RU7K3(Y)	00630(11K)	200L	SF-V5RU7K4(Y)	00630(11K)
11 kW	160L	SF-V5RU11K1(Y)	00770(15K)	180M	SF-V5RU11K3(Y)	00770(15K)	225S	SF-V5RU11K4(Y)	00770(15K)
15 kW	180M	SF-V5RU15K1(Y)	00930(18.5K)	180L	SF-V5RU15K3(Y)	00930(18.5K)	225S	SF-V5RU15K4*3	01250(22K)
18.5 kW	180L	SF-V5RU18K1(Y)	01250(22K)	200L	SF-V5RU18K3(Y)	01250(22K)	250MD	SF-THY	01250(22K)
22 kW	200L	SF-V5RU22K1(Y)	01540(30K)	200L	SF-V5RU22K3(Y)	01540(30K)	280MD	SF-THY	01540(30K)
30 kW	200L*2	SF-V5RU30K1(Y)	01870(37K)	225S*1	SF-V5RU30K3(Y)	01870(37K)	280MD	SF-THY	01870(37K)
37 kW	225S	SF-V5RU37K1(Y)	02330(45K)	250MD*1	SF-THY	02330(45K)	280MD	SF-THY	02330(45K)
45 kW	250MD	SF-THY	03160(55K)	250MD*1	SF-THY	03160(55K)	280MD	SF-THY	03160(55K)
55 kW	250MD	SF-THY	03800(75K)	280MD*1	SF-THY	03800(75K)	280L	SF-THY	03800(75K)

Models surrounded by black borders and 400 V class are developed upon receipt of order. (For the SF-THY model, refer to **page 202**.)

*1 The maximum speed is 2400 r/min.
*2 90% output in the high-speed range. (The output is reduced when the speed is 1000 r/min or higher. For details, please contact your sales representative.)
*3 For motors with overload capacity 150% 60 s ("Y" at the end of their model names), contact your sales representative.
*4 A typical example is shown. To determine the combination of the FR-A800 inverter and the SF-THY motor, please contact your sales representative.

◆ Motor specifications

●200 V class (Mitsubishi Electric dedicated motor [SF-V5RU (1500 r/min series)])

Motor type SF-V5RU[ ]K		1	2	3	5	7	11	15	18	22	30	37	45	55
Applicable inverter model FR-A820-[ ]K (ND rating)		2.2	3.7	5.5	7.5	11	15	18.5	22	30	37	45	55	75
Rated output (kW)		1.5	2.2	3.7	5.5	7.5	11	15	18.5	22	30 *1	37 *1	45 *1	55
Rated current (A)		8.5	11.5	17.6	28.5	37.5	54	72.8	88	102	126	168	198	264
Rated torque (N•m)		9.55	14.1	23.6	35.0	47.7	70.0	95.5	118	140	191	235	286	350
Maximum torque 150% 60 s (N•m)		14.3	21.1	35.4	52.4	71.6	105	143	176	211	287	353	429	525
Rated speed (r/min)		1500												
Maximum speed (r/min)		3000 *2												2400
Frame No.		90L	100L	112M	132S	132M	160M	160L	180M	180M	200L	200L	200L	225S
Inertia moment J ($\times 10^{-4}$ kg•m^2)		67.5	105	175	275	400	750	875	1725	1875	3250	3625	3625	6850
Noise *5		75 dB or less									80 dB or less			85 dB or less
Cooling fan (with thermal protector) *7*8	Voltage	Single-phase 200 V/50 Hz Single-phase 200 V to 230 V/60 Hz					Three-phase 200 V/50 Hz Three-phase 200 to 230 V/60 Hz							
	Input *3	36/55 W (0.26/0.32 A)			22/28 W (0.11/0.13 A)		55/71 W (0.39/0.39 A)				100/156 W (0.47/0.53 A)			85/130 W (0.46/0.52 A)
	Recommended thermal setting	0.36 A			0.18 A		0.51 A				0.69 A			0.68 A
Surrounding air temperature, humidity		-10 to +40°C (non-freezing), 90%RH or less (non-condensing)												
Structure (Protective structure)		Totally enclosed forced draft system (Motor: IP44, cooling fan: IP23S) *4												
Detector		Encoder 2048 pulses/rev, A phase, B phase, Z phase +12 V/24 VDC power supply *6												
Equipment		Encoder, thermal protector, fan												
Heat resistance class		F												
Vibration rank		V10												
Approx. mass (kg)		24	33	41	52	62	99	113	138	160	238	255	255	320

●400 V class (Mitsubishi Electric dedicated motor [SF-V5RUH (1500 r/min series)])

Motor type SF-V5RUH[ ]K		1	2	3	5	7	11	15	18	22	30	37	45	55
Applicable inverter model FR-A840-[ ]K (ND rating)		2.2	2.2	3.7	7.5	11	15	18.5	22	30	37	45	55	75
Rated output (kW)		1.5	2.2	3.7	5.5	7.5	11	15	18.5	22	30 *1	37 *1	45 *1	55
Rated current (A)		4.2	5.8	8.8	14.5	18.5	27.5	35.5	44	51	67	84	99	132
Rated torque (N•m)		9.55	14.1	23.6	35.0	47.7	70.0	95.5	118	140	191	235	286	350
Maximum torque 150% 60 s (N•m)		14.3	21.1	35.4	52.4	71.6	105	143	176	211	287	353	429	525
Rated speed (r/min)		1500												
Maximum speed (r/min)		3000 *2												2400
Frame No.		90L	100L	112M	132S	132M	160M	160L	180M	180M	200L	200L	200L	225S
Inertia moment J ($\times 10^{-4}$ kg•m^2)		67.5	105	175	275	400	750	875	1725	1875	3250	3625	3625	6850
Noise *5		75 dB or less									80 dB or less			85 dB or less
Cooling fan (with thermal protector) *7*8	Voltage	Single-phase 200 V/50 Hz Single-phase 200 V to 230 V/60 Hz					Three-phase 380 to 400 V/50 Hz Three-phase 400 to 460 V/60 Hz							
	Input *3	36/55 W (0.26/0.32 A)			22/28 W (0.11/0.13 A)		55/71 W (0.19/0.19 A)				100/156 W (0.27/0.30 A)			85/130 W (0.23/0.26 A)
	Recommended thermal setting	0.36 A			0.18 A		0.25 A				0.39 A			0.34 A
Surrounding air temperature, humidity		-10 to +40°C (non-freezing), 90%RH or less (non-condensing)												
Structure (Protective structure)		Totally enclosed forced draft system (Motor: IP44, cooling fan: IP23S) *4												
Detector		Encoder 2048 pulses/rev, A phase, B phase, Z phase +12 V/24 VDC power supply *6												
Equipment		Encoder, thermal protector, fan												
Heat resistance class		F												
Vibration rank		V10												
Approx. mass (kg)		24	33	41	52	62	99	113	138	160	238	255	255	320

*1 80% output in the high-speed range. (The output is reduced when the speed is 2400 r/min or more. Contact us separately for details.)
*2 A dedicated motor of 3.7 kW or less can be run at the maximum speed of 3600 r/min. Consult our sales office when using the motor at the maximum speed.
*3 Power (current) at 50 Hz/60 Hz.
*4 Since a motor with brake has a window for gap check, the protective structure of both the cooling fan section and brake section is IP20. S of IP23S is an additional code indicating the condition that protection from water intrusion is established only when a cooling fan is not operating.
*5 The value when high carrier frequency is set (**Pr.72** = 6, **Pr.240** = 0).
*6 The 12 V/24 V power supply is required as the power supply for the encoder. (When the FR-A8TP is used, the 24 V power supply of the FR-A8TP can be used for the encoder of the SF-V5RU.)
*7 The cooling fan is equipped with a thermal protector. The cooling fan stops when the coil temperature exceeds the specified value in order to protect the fan motor. A restrained cooling fan or degraded fan motor insulation could be causes for the rise in coil temperature. The cooling fan re-starts when the coil temperature drops to normal.
*8 The cooling fan voltage and input values are the basic specifications of the cooling fan alone and free air values. The input value becomes slightly larger when the cooling fan is rotated by this motor due to an increased workload, but the cooling fan can be used as it is. When preparing a thermal relay at the user side, use the recommended thermal setting.

◆ Motor outline dimension drawings (standard horizontal type)

Frame Number 90L

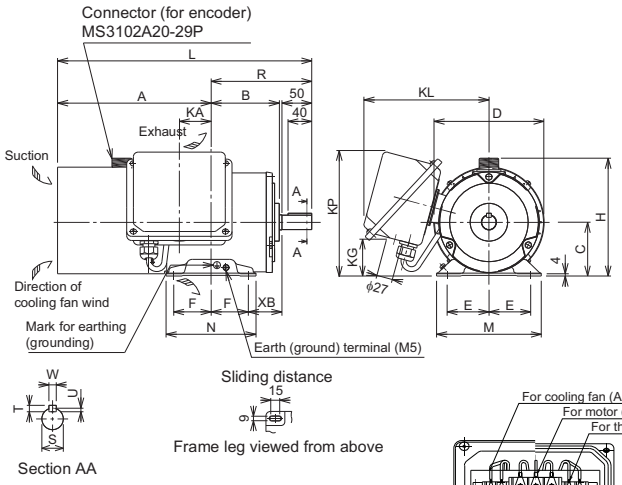

Frame Number 100L, 112M, 132S, 132M

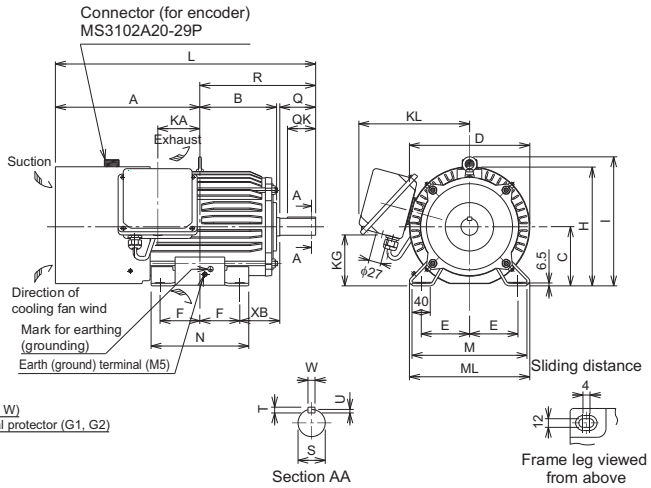

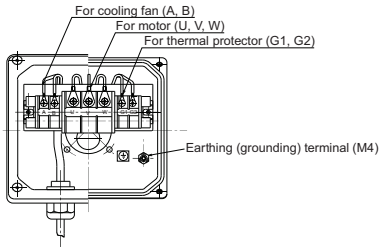

Frame Number 160M, 160L, 180M, 180L

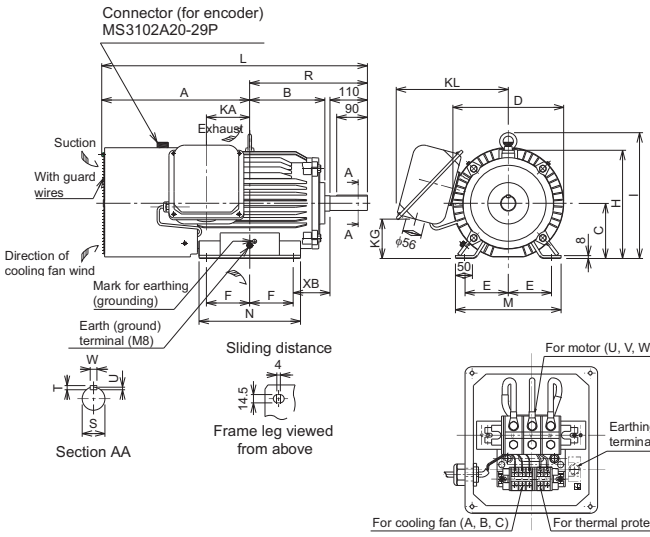

Frame Number 200L, 225S

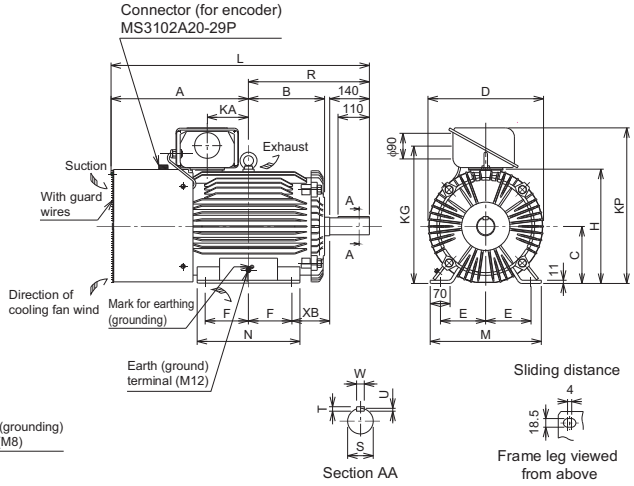

Make sure to earth the earth terminal of the frame installation foot as well as the earth terminal in the terminal box.

Dimensions table

(Unit: mm)

SF-V5RU [ ]K	SF-V5RU [ ]K1	SF-V5RU [ ]K3	SF-V5RU [ ]K4	Frame No.	Mass (kg)	Motor																							Terminal screw size		
						A	B	C	D	E	F	H	I	KA	KG	KL(KP)	L	M	ML	N	XB	Q	QK	R	S	T	U	W	U,V,W	A,B,(C)	G1,G2
1	—	—	—	90L	24	256.5	114	90	183.6	70	62.5	198	—	53	65	220(210)	425	175	—	150	56	—	—	168.5	24j6	7	4	8	M6	M4	M4
2	1	—	—	100L	33	284	128	100	207	80	70	203.5	230	65	78	231	477	200	212	180	63	60	45	193	28j6	7	4	8	M6	M4	M4
3	2	1	—	112M	41	278	135	112	228	95	70	226	253	69	93	242	478	230	242	180	70	60	45	200	28j6	7	4	8	M6	M4	M4
5	3	2	—	132S	52	303	152	132	266	108	70	265	288	75	117	256	542	256	268	180	89	80	63	239	38k6	8	5	10	M6	M4	M4
7	5	3	1	132M	62	322	171	132	266	108	89	265	288	94	117	256	580	256	268	218	89	80	63	258	38k6	8	5	10	M6	M4	M4
11	7	5	2	160M	99	412	198	160	318	127	105	316	367	105	115	330	735	310	—	254	108	—	—	323	42k6	8	5	12	M8	M4	M4
15	11	7	3	160L	113	434	220	160	318	127	127	316	367	127	115	330	779	310	—	298	108	—	—	345	42k6	8	5	12	M8	M4	M4
18	—	—	—	180M	138	438.5	225.5	180	363	139.5	120.5	359	410	127	139	352	790	335	—	285	121	—	—	351.5	48k6	9	5.5	14	M8	M4	M4
22	15	11	—		160																										
—	18	15	5	180L	200	457.5	242.5	180	363	139.5	139.5	359	410	146	139	352	828	335	—	323	121	—	—	370.5	55m6	10	6	16	M8	M4	M4
30	—	—	7	200L	238	483.5	267.5	200	406	159	152.5	401	—	145	487	(546)	909	390	—	361	133	—	—	425.5	60m6	11	7	18	M10	M4	M4
37, 45	22, 30	18, 22	—		255																										
55	37	30	11, 15	225S	320	500	277	225	446	178	143	446	—	145	533	(592)	932	428	—	342	149	—	—	432	65m6	11	7	18	M10	M4	M4

Note) 1. Install the motor with a frame number 180 or larger on the floor and use it with the shaft horizontal.
2. Leave an enough clearance between the fan suction port and wall to ensure adequate cooling.
Also, check that the ventilation direction of a fan is from the opposite load side to the load side.
3 The size difference of top and bottom of the shaft center height is $^{0}_{-0.5}$
4 The 400 V class motor has "H" in its model name.

◆ Motor outline dimension drawings (standard horizontal type with brake)

Frame Number 90L

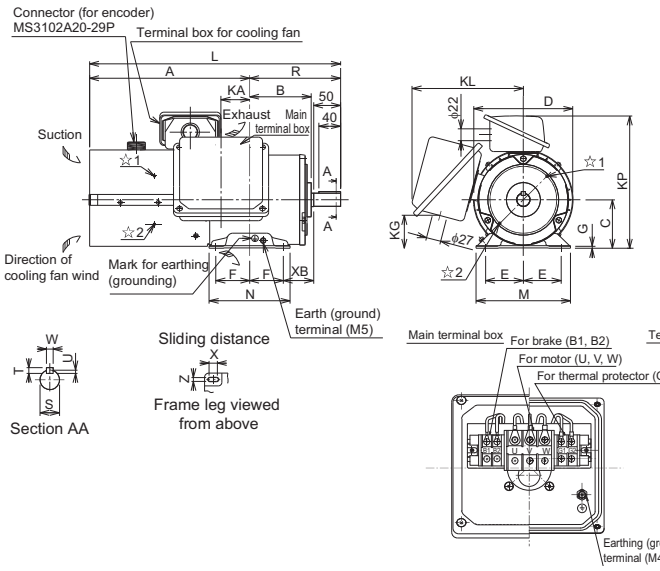

Frame Number 100L, 112M, 132S, 132M

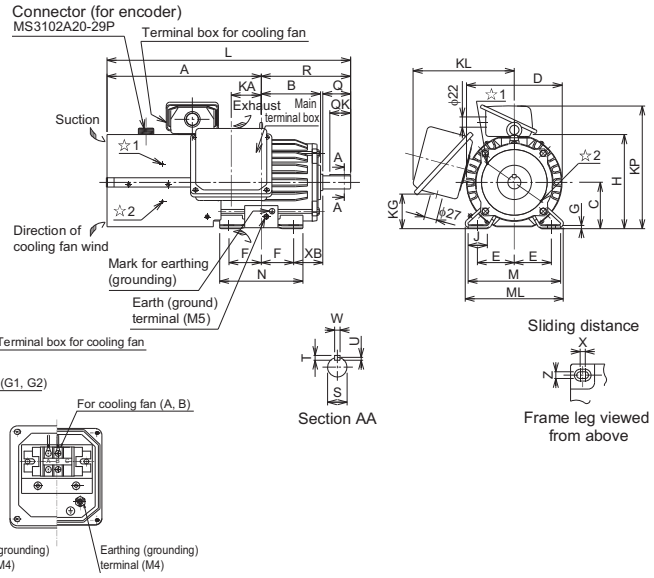

Frame Number 160M, 160L, 180M, 180L

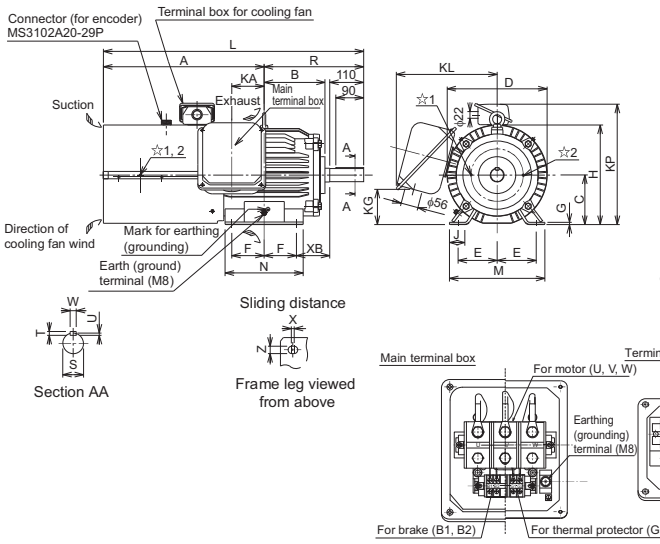

Frame Number 200L, 225S

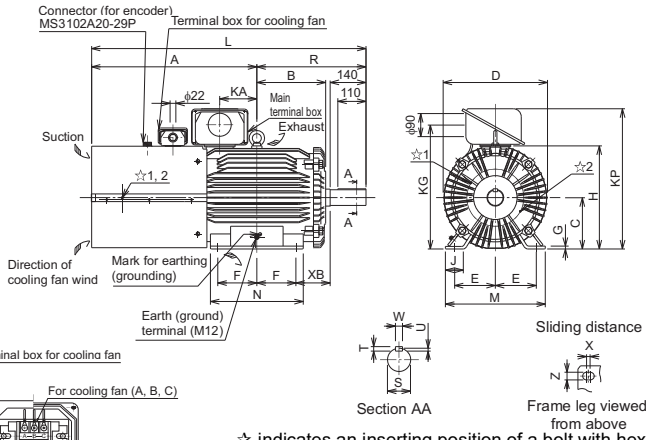

☆ indicates an inserting position of a bolt with hex head holes for manual opening.
Make sure to earth the earth terminal of the frame installation foot as well as the earth terminal in the terminal box.

Dimensions table

(Unit: mm)

SF-V5RU[]KB	SF-V5RU[]K1B	SF-V5RU[]K3B	SF-V5RU[]K4B	Frame No.	Mass (kg)	Motor																						Shaft end							Terminal screw size			
						A	B	C	D	E	F	G	H	I	J	KA	KD	KG	KL	KP	L	M	ML	N	X	XB	Z	Q	QK	R	S	T	U	W	U,V,W	A,B,(C)	G1,G2	B1,B2
1	—	—	—	90L	29	296.5	114	90	183.6	70	62.5	4	—	—	—	53	27	65	220	245	465	175	—	150	15	56	9	50	40	168.5	24j6	7	4	8	M6	M4	M4	M4
2	1	—	—	100L	46	333.5	128	100	207	80	70	6.5	—	—	40	65	27	78	231	265	526.5	200	212	180	4	63	12	60	45	193	28j6	7	4	8	M6	M4	M4	M4
3	2	1	—	112M	53	355	135	112	228	95	70	6.5	—	—	40	69	27	93	242	290	555	230	242	180	4	70	12	60	45	200	28j6	7	4	8	M6	M4	M4	M4
5	3	2	—	132S	70	416	152	132	266	108	70	6.5	—	—	40	75	27	117	256	329	655	256	268	180	4	89	12	80	63	239	38k6	8	5	10	M6	M4	M4	M4
7	5	3	1	132M	80	435	171	132	266	108	89	6.5	—	—	40	94	27	117	256	329	693	256	268	218	4	89	12	80	63	258	38k6	8	5	10	M6	M4	M4	M4
11	7	5	2	160M	140	522.5	198	160	318	127	105	8	—	—	50	105	56	115	330	391	845.5	310	—	254	4	108	14.5	110	90	323	42k6	8	5	12	M8	M4	M4	M4
15	11	7	3	160L	155	544.5	220	160	318	127	127	8	—	—	50	127	56	115	330	391	889.5	310	—	298	4	108	14.5	110	90	345	42k6	8	5	12	M8	M4	M4	M4
18	—	—	—	180M	185	568.5	225.5	180	363	139.5	120.5	8	—	—	50	127	56	139	352	428	920	335	—	285	4	121	14.5	110	90	351.5	48k6	9	5.5	14	M8	M4	M4	M4
22	15	11	—		215																																	
—	18	15	5	180L	255	587.5	242.5	180	363	139.5	139.5	8	—	—	50	146	56	139	352	428	958	335	—	323	4	121	14.5	110	90	370.5	55m6	10	6	16	M8	M4	M4	M4
30	—	—	7	200L	305	644.5	267.5	200	406	159	152.5	11	—	—	70	145	90	487	—	546	1070	390	—	361	4	133	18.5	140	110	425.5	60m6	11	7	18	M10	M4	M4	M4
37, 45	22, 30	18, 22	—		330																																	
55	37	30	11, 15	225S	395	659	277	225	446	178	143	11	—	—	70	145	90	533	—	592	1091	428	—	342	4	149	18.5	140	110	432	65m6	11	7	18	M10	M4	M4	M4

Note) 1. Install the motor on the floor and use it with the shaft horizontal.
2. Leave an enough clearance between the fan suction port and wall to ensure adequate cooling.
Also, check that the ventilation direction of a fan is from the opposite load side to the load side.
3 The size difference of top and bottom of the shaft center height is $^{0}_{-0.5}$
4 The 400 V class motor has "H" in its model name.
5. Since a brake power device is a stand-alone, install it inside the enclosure.
(This device should be arranged at the customer side.)

◆ Motor outline dimension drawings (flange type)

Frame Number 90L

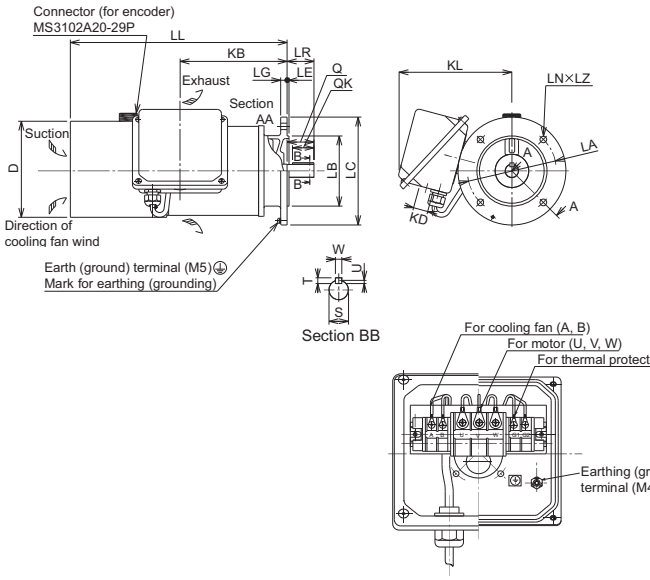

Frame Number 100L, 112M, 132S, 132M

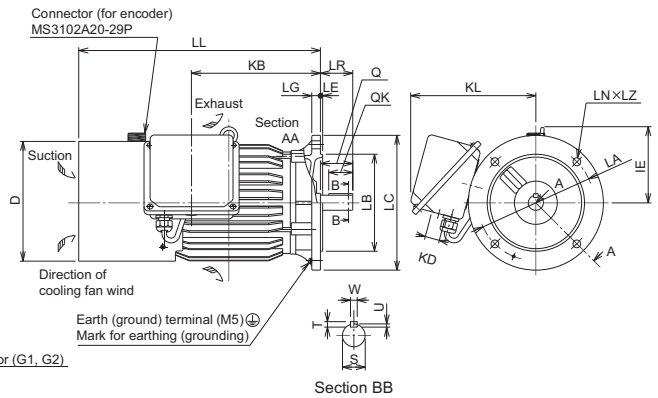

Frame Number 160M, 160L, 180M, 180L

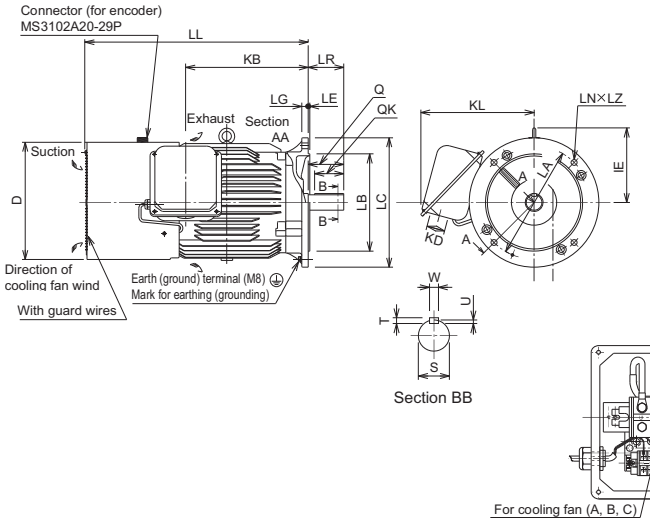

Frame Number 200L

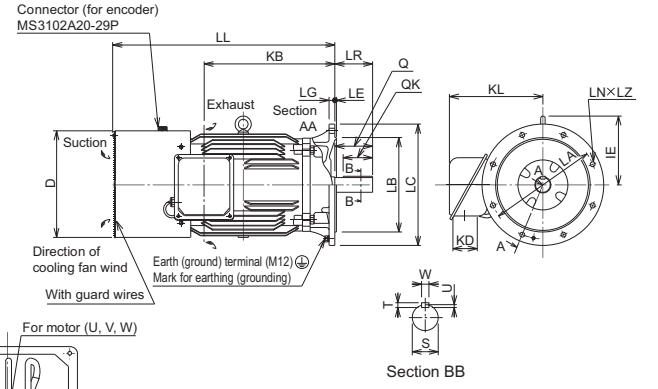

Make sure to earth the earth terminal of the flange section as well as the earth terminal in the terminal box.

Dimensions table

(Unit: mm)

SF-V5RU F[ ]K	SF-V5RU F[ ]K1	SF-V5RU F[ ]K3	SF-V5RU F[ ]K4	Flange Number	Frame No.	Mass (kg)	Motor													Shaft end							Terminal screw size		
							D	IE	KB	KD	KL	LA	LB	LC	LE	LG	LL	LN	LZ	LR	Q	QK	S	T	U	W	U,V,W	A,B,(C)	G1,G2
1	—	—	—	FF165	90L	26.5	183.6	—	198.5	27	220	165	130j6	200	3.5	12	402	4	12	50	50	40	24j6	7	4	8	M6	M4	M4
2	1	—	—	FF215	100L	37	207	130	213	27	231	215	180j6	250	4	16	432	4	14.5	60	60	45	28j6	7	4	8	M6	M4	M4
3	2	1	—	FF215	112M	46	228	141	239	27	242	215	180j6	250	4	16	448	4	14.5	60	60	45	28j6	7	4	8	M6	M4	M4
5	3	2	—	FF265	132S	65	266	156	256	27	256	265	230j6	300	4	20	484	4	14.5	80	80	63	38k6	8	5	10	M6	M4	M4
7	5	3	1	FF265	132M	70	266	156	294	27	256	265	230j6	300	4	20	522	4	14.5	80	80	63	38k6	8	5	10	M6	M4	M4
11	7	5	2	FF300	160M	110	318	207	318	56	330	300	250j6	350	5	20	625	4	18.5	110	110	90	42k6	8	5	12	M8	M4	M4
15	11	7	3	FF300	160L	125	318	207	362	56	330	300	250j6	350	5	20	669	4	18.5	110	110	90	42k6	8	5	12	M8	M4	M4
18	—	—	—	FF350	180M	160	363	230	378.5	56	352	350	300j6	400	5	20	690	4	18.5	110	110	90	48k6	9	5.5	14	M8	M4	M4
22	15	11	—			185																							
—	18	15	5	FF350	180L	225	363	230	416.5	56	352	350	300j6	400	5	20	728	4	18.5	110	110	90	55m6	10	6	16	M8	M4	M4
30	—	—	7	FF400	200L	270	406	255	485	90	346	400	350j6	450	5	22	823.5	8	18.5	140	140	110	60m6	11	7	18	M10	M4	M4
37, 45	22, 30	18, 22	—			290																							

Note) 1. The motor with a frame number 180 or larger cannot be installed on the ceiling (with the shaft facing up).
For use under the shaft, the protection structure of the cooling fan is IP20.
2. Leave an enough clearance between the fan suction port and wall to ensure adequate cooling.
Also, check that the ventilation direction of a fan is from the opposite load side to the load side.
3. The 400 V class motor has "H" in its model name.

◆ Motor outline dimension drawings (flange type with brake)

Frame Number 90L

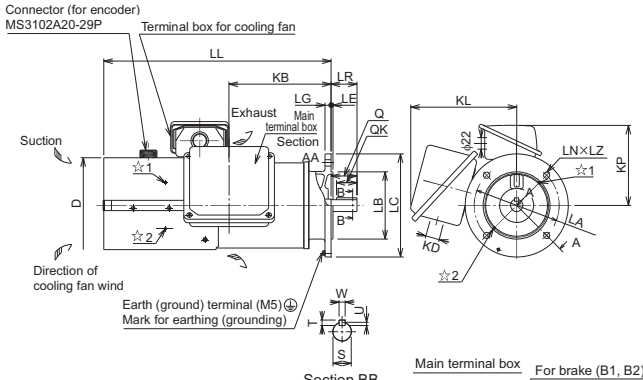

Frame Number 100L, 112M, 132S, 132M

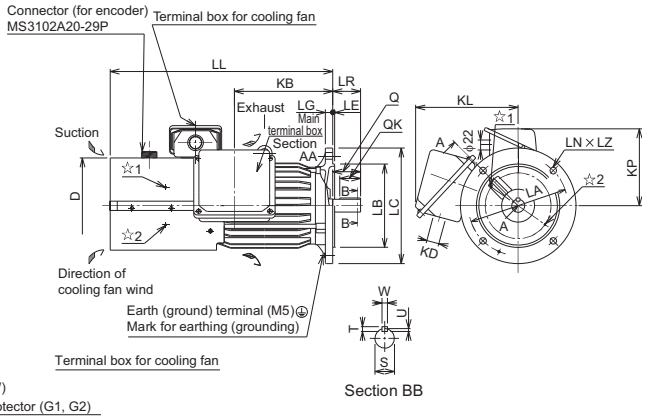

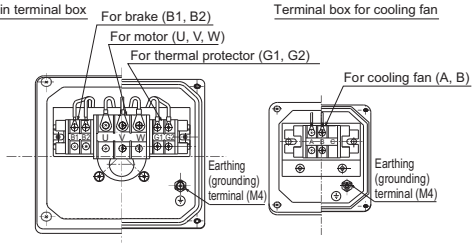

Frame Number 160M, 160L

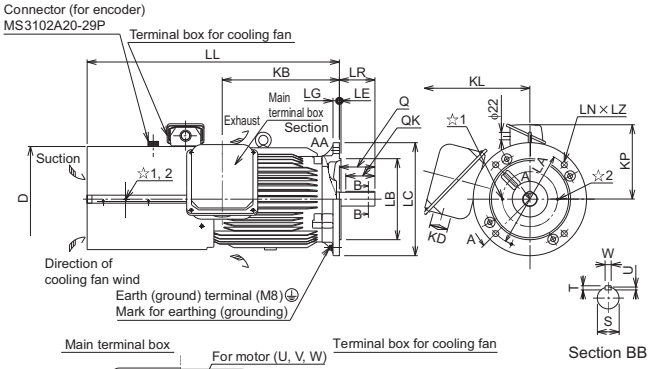

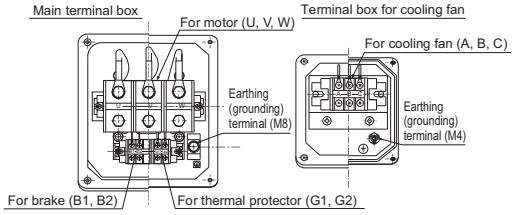

☆ indicates an inserting position of a bolt with hex head holes for manual opening.

Make sure to earth the earth terminal of the flange section as well as the earth terminal in the terminal box.

Dimensions table

(Unit: mm)

SF-V5RU F[ ]KB	SF-V5RU F[ ]K1B	SF-V5RU F[ ]K3B	SF-V5RU F[ ]K4B	Flange Number	Frame No.	Mass (kg)	Motor													Shaft end							Terminal screw size			
							D	KB	KD	KL	KP	LA	LB	LC	LE	LG	LL	LN	LZ	LR	Q	QK	S	T	U	W	U,V,W	A,B,(C)	B1,B2	G1,G2
1	—	—	—	FF165	90L	31.5	183.6	198.5	27	220	155	165	130j6	200	3.5	12	442	4	12	50	50	40	24j6	7	4	8	M6	M4	M4	M4
2	1	—	—	FF215	100L	50	207	213	27	231	165	215	180j6	250	4	16	481.5	4	14.5	60	60	45	28j6	7	4	8	M6	M4	M4	M4
3	2	1	—	FF215	112M	58	228	239	27	242	178	215	180j6	250	4	16	525	4	14.5	60	60	45	28j6	7	4	8	M6	M4	M4	M4
5	3	2	—	FF265	132S	83	266	256	27	256	197	265	230j6	300	4	20	597	4	14.5	80	80	63	38k6	8	5	10	M6	M4	M4	M4
7	5	3	1	FF265	132M	88	266	294	27	256	197	265	230j6	300	4	20	635	4	14.5	80	80	63	38k6	8	5	10	M6	M4	M4	M4
11	7	5	2	FF300	160M	151	318	318	56	330	231	300	250j6	350	5	20	735.5	4	18.5	110	110	90	42k6	8	5	12	M8	M4	M4	M4
15	11	7	3	FF300	160L	167	318	362	56	330	231	300	250j6	350	5	20	779.5	4	18.5	110	110	90	42k6	8	5	12	M8	M4	M4	M4

Note) 1. Install the motor on the wall and use it with the shaft horizontal.
2. Leave an enough clearance between the fan suction port and wall to ensure adequate cooling.
Also, check that the ventilation direction of a fan is from the opposite load side to the load side.
3. The 400 V class motor has "H" in its model name.
4. Since a brake power device is a stand-alone, install it inside the enclosure.
(This device should be arranged at the customer side.)

● Application to vector control dedicated motors (SF-THY) (75 kW or higher)

For performing vector control, the FR-A8AP/FR-A8TP (vector control compatible option) is required.
When the FR-A8TP is not used, a 12/24 VDC power supply is required as the power supply for the encoder of the SF-THY. (When the FR-A8TP is used, the 24 V power supply of the FR-A8TP can be used for the encoder of the SF-THY.)

◆ Motor torque

When the vector control dedicated motor (SF-THY) and inverter of the same capacity are used and rated voltage is input, the torque characteristics are as shown below.

<75 (kW)>

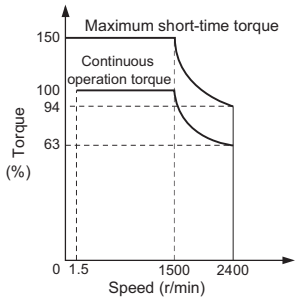

<90 to 250 (kW)>

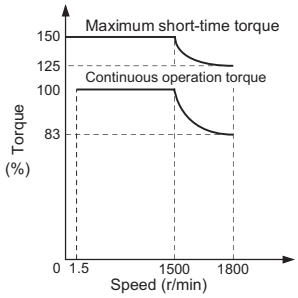

◆ Model lineup

- Rated speed: 1500 r/min (4 poles)

Model	Standard type	Rated output (kW)						
		75	90	110	132	160	200	250
Standard horizontal type	SF-THY[]	75	90	110	132	160	200	250

- Both 200 V and 400 V classes have the same model name.
  Since motors with speed ratio of 1:2, 1:3, or 1:4 are available as special products, contact your sales representative.

◆ Motor specifications

Motor type			SF-THY							
Applicable inverter (ND rating)			FR-A820-[ ]K	FR-A840-[ ]K						
			90	90	110	132	160	185	220	280
Rated output (kW)			75	75	90	110	132	160	200	250
Rated torque (N·m)			477	477	572	700	840	1018	1273	1591
Maximum torque 150%60 s (N·m)			715	715	858	1050	1260	1527	1909	2386
Rated speed (r/min)			1500	1500						
Maximum speed (r/min)			2400	2400	1800					
Frame No.			250MD	250MD	250MD	280MD	280MD	280MD	280L	315H
Inertia moment J (kg·m^2)			1.1	1.1	1.7	2.3	2.3	4.0	3.8	5.0
Noise			90 dB	90 dB			95 dB			
Cooling fan	Voltage		Three-phase, 200 V/50 Hz, 200 V/60 Hz, 220 V/60 Hz (400 V class cooling fan is available upon order)							
	Input (W)	50 Hz	750	400	400	400	400	400	750	750
		60 Hz		750	750	750	750	750	1500	1500
Approx. mass (kg)			610	610	660	870	890	920	1170	1630
Common specifications	Surrounding air temperature, humidity		-10 to +40°C (non-freezing), 90%RH or less (non-condensing)							
	Structure		Totally enclosed forced draft system							
	Equipment		Encoder, thermal protector*2, fan							
	Insulation		Class F							
	Vibration rank		V10							
	Dedicated encoder	Resolution	2048 pulse/rev							
		Power supply voltage	12 V/24 VDC±10% *1							
		Current consumption	90 mA							
		Output signal form	A, B phases (90° phase shift) Z phase: 1 pulse/rev							
		Output circuit	Complementary (constant voltage output matched by emitter follow)							
		Output voltage	"H" level: Power supply voltage 9 V or more (IOH: -20 mA) "L" level: Power supply voltage 3 V or less (IOL: 20 mA)							

*1 The 12 V/24 V power supply is required as the power supply for the encoder.
*2 A motor with a thermal protector is also available. Contact your sales representative.

◆ Motor outline dimension drawings (1500 r/min series)

Frame Number 250MD, 280MD
75 kW to 160 kW

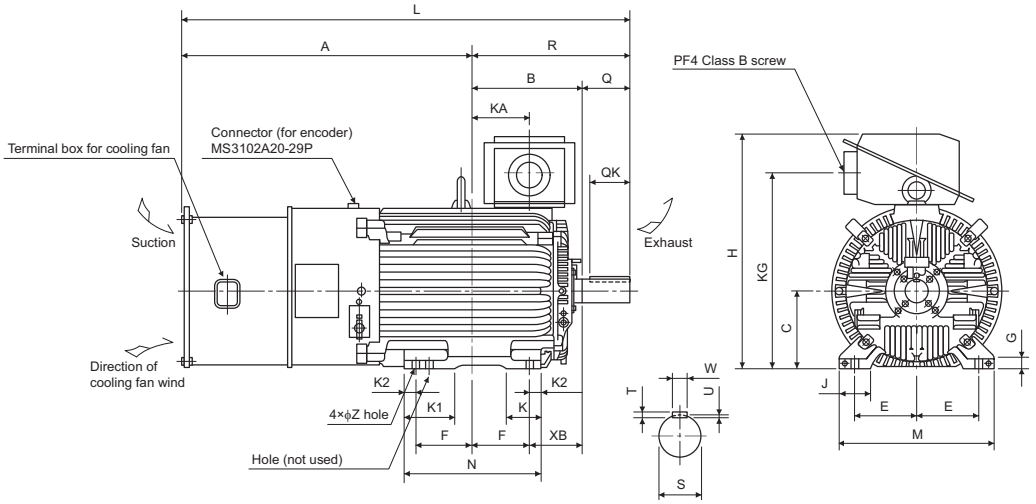

Frame Number 280L, 315H
200 kW, 250 kW

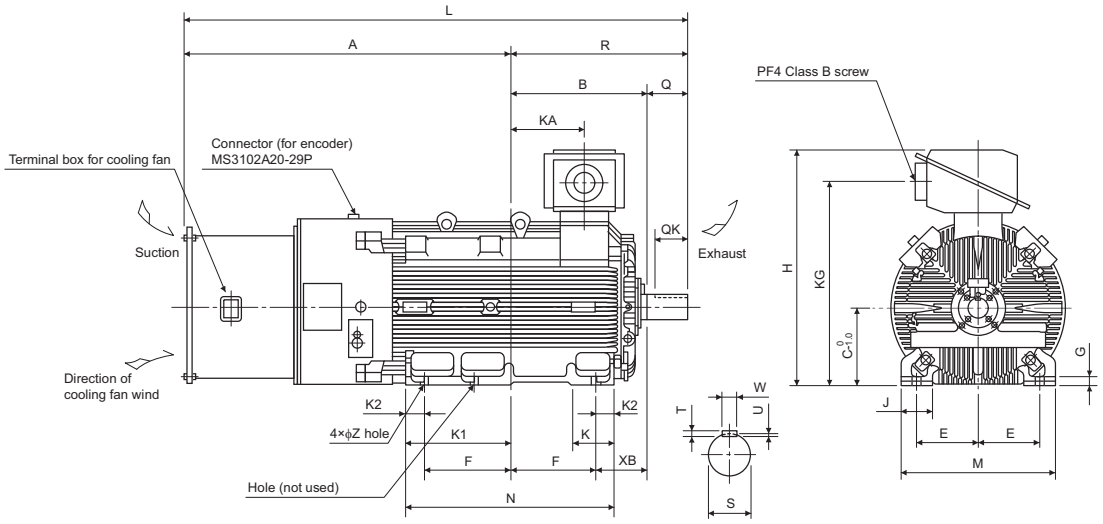

Dimensions table

(Unit: mm)

Output	Frame No.	Mass (kg)	Motor																				Shaft end size					
			A	B	C	D	E	F	G	H	J	K	K1	K2	L	M	N	R	Z	XB	KA	KG	Q	QK	S	W	T	U
75	250MD	610	988.5	340.5	250	557	203	174.5	30	775	100	130	168	50	1471	486	449	482.5	24	168	157.5	635	140	110	ϕ75m6	20	12	7.5
90	250MD	660	988.5	340.5	250	557	203	174.5	30	775	100	130	168	50	1471	486	449	482.5	24	168	157.5	635	140	110	ϕ75m6	20	12	7.5
110	280MD	870	1049.5	397.5	280	607	228.5	209.5	30	845	110	130	181	40	1619	560	449	569.5	24	190	210.5	705	170	140	ϕ85m6	22	14	9
132	280MD	890	1049.5	397.5	280	607	228.5	209.5	30	845	110	130	181	40	1619	560	449	569.5	24	190	210.5	705	170	140	ϕ85m6	22	14	9
160	280MD	920	1049.5	397.5	280	607	228.5	209.5	30	845	110	130	181	40	1619	560	499	569.5	24	190	210.5	705	170	140	ϕ85m6	22	14	9
200	280L	1170	1210.5	416.5	280	652	228.5	228.5	30	885	110	160	160	75	1799	560	607	588.5	24	190	214.5	745	170	140	ϕ85m6	22	14	9
250	315H	1630	1343	565	315	717	254	355	35	965	130	175	428	80	2084	636	870	741	28	216	306	825	170	140	ϕ95m6	25	14	9

Note) The tolerance of the top and bottom of the center shaft height *C is $^{0}_{-0.5}$ for the 250 frame and $^{0}_{-1.0}$ for the 280 frame or more.

● IE5 compliant energy-saving high-accuracy PM motor EM-A series

The EM-A series high-performance magnet motors have Mitsubishi Electric's unique salient pole core*1 and enable positioning and speed control without using sensors.

*1 Japanese Patent No. 5646119

◆ Compact and energy-saving

- Adopting an optimal motor core shape for sensorless control reduces the volume by 50 to 60% and the mass by 30 to 50% compared with induction motors.
- This energy-saving motor is compliant with IE5 efficiency class for variable speed motors*2.

*2 Based on the efficiency standard (%) for variable speed motors (rated speed: 1801 to 6000 r/min) specified in IEC 60034-30-2.

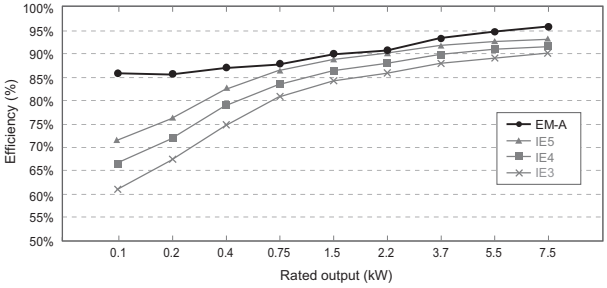

◆ Global

- This magnet motor does not need to be certified as compliant with high-efficiency standards in each country*3.
- The motor has already been certified as compliant with international safety standards (UL, CE).*4

*3 As of April 2021 (For the shipment to China, the China Energy Label must be attached to the product.)
*4 For the 400 V class, 0.4 kW or higher models are certified.

◆ High performance

- The EM-A series enables highly accurate speed control with less speed fluctuations due to load change by using Mitsubishi Electric's unique PM sensorless vector control.
- The motor can be used for high-accuracy transport applications such as production lines of semiconductors or liquid crystals.
- Operation at stable speed under load variation is possible.
  Speed fluctuation: ±0.05%*5
  Speed control range: 1:1300
- Holding torque is generated by the servo lock function when the motor stops, preventing movements caused by external forces.
- This new salient pole type magnet motor and Mitsubishi Electric's unique high-performance sensorless control technique enable highly accurate speed control and positioning without using an encoder.
  Positioning accuracy: ±1.8°*6

*5 During the load fluctuation of 0 to 100%
Speed fluctuation ratio = (actual speed - command speed) / rated speed × 100 (%)
*6 Accuracy when the input voltage is 200 VAC, wiring length is 5 m or less, and the position accuracy compensation gain tuning is performed.

[Operation torque characteristics]

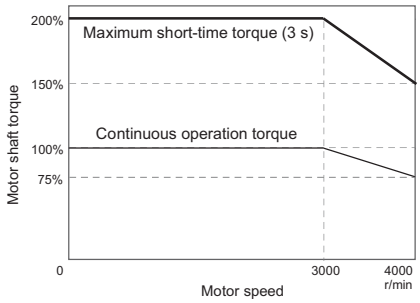

When the input voltage is low, the torque may be reduced.
The continuous operation torque is 90% at 10 r/min or less (for 1.5 kW or higher).
When driving the motor under high load in a low-speed range (especially at 15 r/min or lower for 0.75 kW or lower, or at 10 r/min or lower for 1.5 kW or higher), the protective function by electronic thermal O/L relay (E.THT, ETHM) may be activated and the short time operation range torque may not be generated.

◆ Lineup

EM-AMF □ □ □ 0.1kW 3000r/min 200V

Symbol	Electromagnetic brake
None	Without
B	With

Symbol	Shaft end
None	Standard
K	Key shaft

Symbol	Protective structure
None	IP44
W	IP65
T	With terminal block (only for models without brake)

Output
0.1 to 7.5kW

Symbol	Description
200V	200 V class
400V	400 V class

◆ Compatibility between EM-A motors and FR-A800 inverters

Model	Applicable motor capacity (kW)								
	0.1	0.2	0.4	0.75	1.5	2.2	3.7	5.5	7.5
Three-phase 200 V FR-A820	-	-	-	○	○	○	○	○	○
Three-phase 400 V FR-A840	-	-	-	-	-	-	-	-	-

○: Compatible, -: Not applicable

◆ Outline Dimensions

●EM-AMF 0.75kW

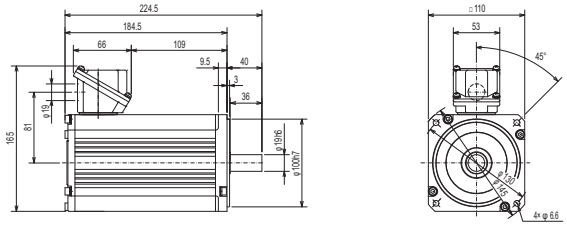

●EM-AMF 1.5kW

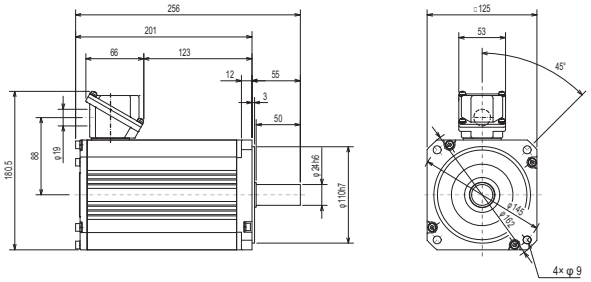

●EM-AMF 2.2kW

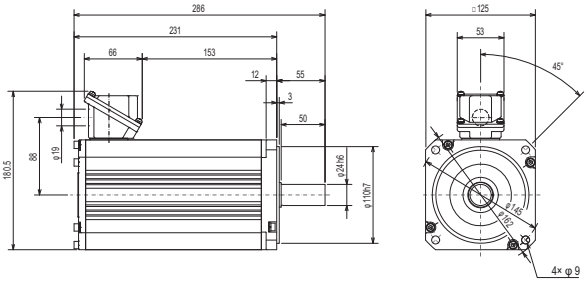

●EM-AMF 3.7kW

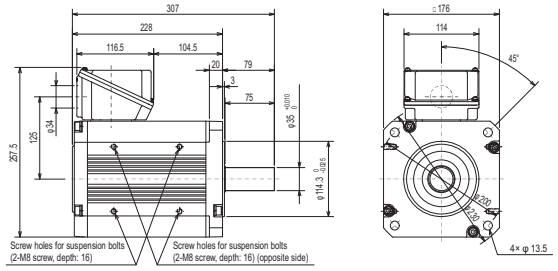

●EM-AMF 5.5kW

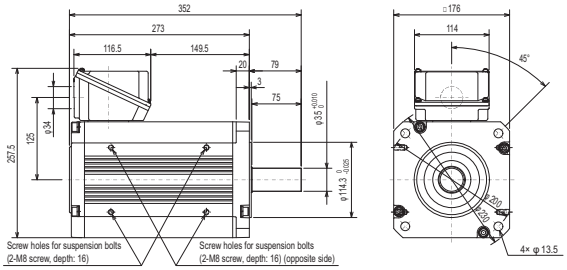

●EM-AMF 7.5kW

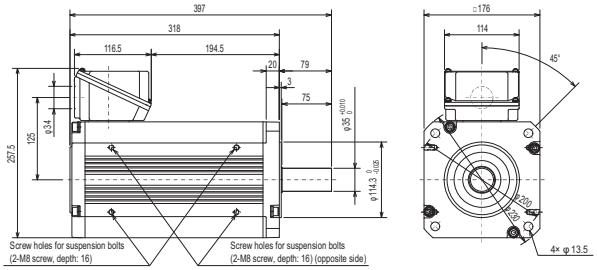

(Unit: mm)

●EM-AMFB 0.75kW

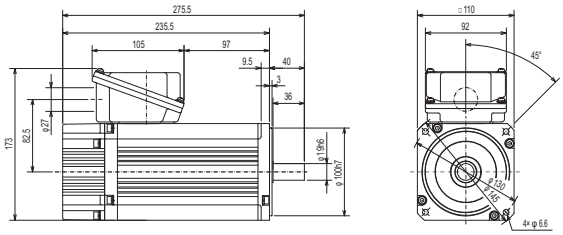

●EM-AMFB 1.5kW

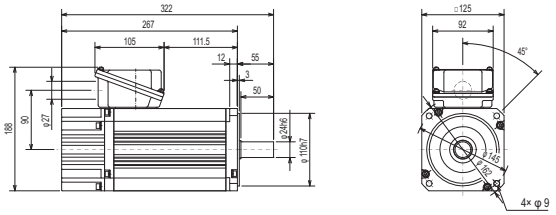

●EM-AMFB 2.2kW

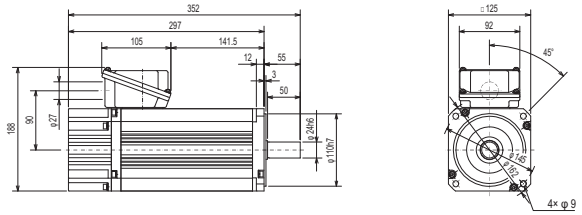

●EM-AMFB 3.7kW

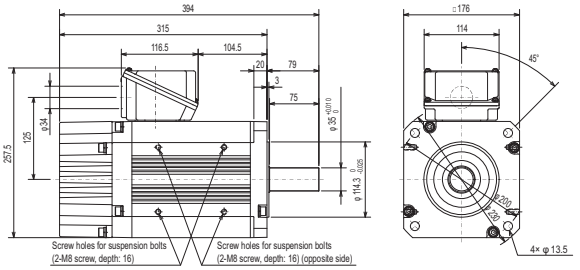

●EM-AMFB 5.5kW

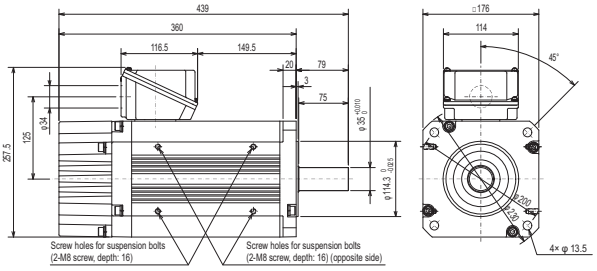

●EM-AMFB 7.5kW

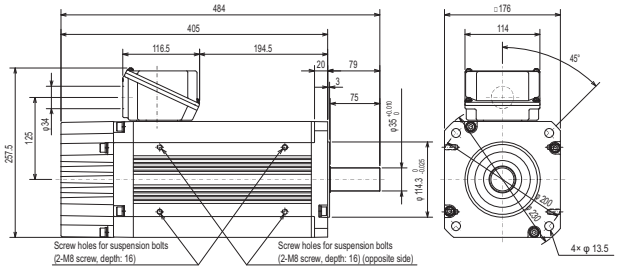

(Unit: mm)

PM sensorless vector control, PM parameter initial setting

Pr.	GROUP	Name	Pr.	GROUP	Name
998	E430	PM parameter initialization	IPM		IPM initialization

Performing the IPM parameter initialization makes the EM-A ready for PM sensorless vector control. (This function is not available in the FR-A842-P.)

PM sensorless vector control requires the following conditions.

- The motor capacity is equal to or one rank lower than the inverter capacity.
- Single-motor operation (one motor to one inverter) is preformed.
- The overall wiring length with the motor is 100 m or shorter. (Even with the EM-A, when the wiring length exceeds 30 m, perform offline auto tuning.)

◆ Setting procedure of PM sensorless vector control

◆ Selecting the PM sensorless vector control by the IPM initialization mode

This inverter is set for an induction motor in the initial setting. Follow the following procedure to change the setting for the PM sensorless vector control.

POINT

- The parameters required to drive an EM-A are automatically changed as a batch.
- To change to the PM sensorless vector control, perform the following steps before setting other parameters. If the PM sensorless vector control is selected after setting other parameters, some of those parameters will be initialized too. (Refer to "IPM parameter initialization list" for the parameters that are initialized.)

Operation

1. Turning ON the power of the inverter

The operation panel is in the monitor mode.

2. Changing the operation mode

Press [PU/EXT] to choose the PU operation mode. [PU] indicator is lit.

3. Selecting the parameter setting mode

Press [MODE] to choose the parameter setting mode. [PRM] indicator is lit.

4. IPM parameter initialization

Turn [⊕] until "IPM" (IPM parameter initialization) appears.

5. Displaying the set value

Press [SET] to read the present set value. "0" (initial value) appears.

6. Changing the setting value

Turn [⊕] to change the set value to "3044", then press [SET].

"3044" and "IPM" are displayed alternately. The setting is completed.

Setting value	Description
0	Parameter settings for an induction motor
3003	Parameter settings for an IPM motor MM-CF (rotations per minute)
3044	Parameter settings for a PM motor EM-A (rotations per minute)

NOTE

- If parameters are initialized for a PM motor in the IPM initialization mode, the **Pr.998 PM parameter initialization** setting is automatically changed.
- In the initial parameter setting, the capacity same as the inverter capacity is set in **Pr.80 Motor capacity**. To use a motor capacity that is one rank lower than the inverter capacity, set **Pr.80 Motor capacity** before performing PM parameter initialization.
- To set a speed or to display monitored items in frequency, set **Pr.998**. (Refer to Instruction Manual (Detailed).)
- The S-PM geared motor cannot be driven.

◆ Selecting the PM sensorless vector control by Pr.998

- Setting **Pr.998 PM parameter initialization** as shown in the following table activates PM sensorless vector control.

Pr.998 setting	Description	Operation on IPM parameter initialization
0 (initial value)	Parameter settings for an induction motor (frequency)	IPM (IPM) → write "0"
3003	Parameter settings for an IPM motor MM-CF (rotations per minute)	IPM (IPM) → write "3003"
3044	Parameter settings for a PM motor EM-A (rotations per minute)	IPM (IPM) → write "3044"
3103	Parameter settings for an IPM motor MM-CF (frequency)	-
3144	Parameter settings for a PM motor EM-A (frequency)	-
8009	Parameter setting (in rotations per minute) for an IPM motor other than EM-A or MM-CF (after tuning)	-
8109	Parameter setting (in frequencies) for an IPM motor other than EM-A or MM-CF (after tuning)	-
9009	Parameter (rotations per minute) settings for an SPM motor (after tuning)	-
9109	Parameter (frequency) settings for an SPM motor (after tuning)	-

NOTE

- The S-PM geared motor cannot be driven.

◆ PM parameter initialization list

- The parameter settings in the following table are changed to the settings required to perform PM sensorless vector control by selecting PM sensorless vector control with the IPM parameter initialization mode on the operation panel or with **Pr.998 PM parameter initialization**. The changed settings differ according to the specification (capacity) of the PM motor used.
- Performing parameter clear or all parameter clear sets back the parameter settings to the settings required to drive an induction motor.

Pr.	Name	Induction motor		PM motor (setting in rotations per minute)	PM motor (setting in frequencies)	Setting increments	
		0 (initial value)		Pr.998 = "3044" (EM-A)	Pr.998 = "3144" (EM-A)	Pr.998 = "3044"	Pr.998 = "3144"
		FM	CA				
1	Maximum frequency	120 Hz		Maximum motor rotations per minute*3	Maximum motor frequency*3	1 r/min	0.01 Hz
4	Multi-speed setting (high speed)	60 Hz	50 Hz	Rated motor rotations per minute*3	Rated motor frequency*3	1 r/min	0.01 Hz
9	Electronic thermal O/L relay	Inverter rated current		Rated motor current*3		0.01 A	
10	DC injection brake operation frequency	3 Hz		Rated motor rotations per minute × 3%*3	Rated motor frequency × 3%*3	1 r/min	0.01 Hz
13	Starting frequency	0.5 Hz		Rated motor rotations per minute × 0.5%*3	Rated motor frequency × 0.5%*3	1 r/min	0.01 Hz
15	Jog frequency	5 Hz		Rated motor rotations per minute × 10%*3	Rated motor frequency × 10%*3	1 r/min	0.01 Hz
18	High speed maximum frequency	120 Hz		Maximum motor rotations per minute*3	Maximum motor frequency*3	1 r/min	0.01 Hz
20	Acceleration/deceleration reference frequency	60 Hz	50 Hz	Rated motor rotations per minute*3	Rated motor frequency*3	1 r/min	0.01 Hz
22	Stall prevention operation level	150%*1		200%		0.1%	
37	Speed display	0		0		1	
55	Frequency monitoring reference	60 Hz	50 Hz	Rated motor rotations per minute*3	Rated motor frequency*3	1 r/min	0.01 Hz
56	Current monitoring reference	Inverter rated current		Rated motor current*3		0.01 A	
71	Applied motor	0		1140		1	
80	Motor capacity	9999		Motor capacity (EM-A)*2		0.01 kW	
81	Number of motor poles	9999		Number of motor poles (EM-A)*2		1	
84	Rated motor frequency	9999		Rated motor rotations per minute*3	Rated motor frequency*3	1 r/min	0.01 Hz
116	Third output frequency detection	60 Hz	50 Hz	Rated motor rotations per minute*3	Rated motor frequency*3	1 r/min	0.01 Hz
125 (903)	Terminal 2 frequency setting gain frequency	60 Hz	50 Hz	Rated motor rotations per minute*3	Rated motor frequency*3	1 r/min	0.01 Hz
126 (905)	Terminal 4 frequency setting gain frequency	60 Hz	50 Hz	Rated motor rotations per minute*3	Rated motor frequency*3	1 r/min	0.01 Hz
144	Speed setting switchover	4		Number of motor poles (EM-A) + 100*3	Number of motor poles (EM-A)*3	1	
240	Soft-PWM operation selection	1		0		1	
263	Subtraction starting frequency	60 Hz	50 Hz	Rated motor rotations per minute*3	Rated motor frequency*3	1 r/min	0.01 Hz
266	Power failure deceleration time switchover frequency	60 Hz	50 Hz	Rated motor rotations per minute*3	Rated motor frequency*3	1 r/min	0.01 Hz
374	Overspeed detection level	9999		Maximum motor rotations per minute × 115%*3	Maximum motor frequency × 115%*3	1 r/min	0.01 Hz
386	Frequency for maximum input pulse	60 Hz	50 Hz	Rated motor rotations per minute*3	Rated motor frequency*3	1 r/min	0.01 Hz
422	Position control gain	25 s^{-1}		20 s^{-1}		1 s^{-1}	
505	Speed setting reference	60 Hz	50 Hz	Rated motor frequency*3		0.01 Hz	
557	Current average value monitor signal output reference current	Inverter rated current		Rated motor current*3		0.01 A	
665	Regeneration avoidance frequency gain	100%		80%		0.1%	
820	Speed control P gain 1	60%		30%		1%	
821	Speed control integral time 1	0.333 s		0.333 s		0.001 s	
824	Torque control P gain 1 (current loop proportional gain)	100%		150%		1%	
825	Torque control integral time 1 (current loop integral time)	5 ms		6.7 ms		0.1 ms	
870	Speed detection hysteresis	0 Hz		Rated motor rotations per minute × 0.5%*3	Rated motor frequency × 0.5%*3	1 r/min	0.01 Hz
885	Regeneration avoidance compensation frequency limit value	6 Hz		Rated motor rotations per minute × 6%*3	Rated motor frequency × 6%*3	1 r/min	0.01 Hz

Pr.	Name	Induction motor		PM motor (setting in rotations per minute)	PM motor (setting in frequencies)	Setting increments	
		0 (initial value)		Pr.998 = "3044" (EM-A)	Pr.998 = "3144" (EM-A)	Pr.998 = "3044"	Pr.998 = "3144"
		FM	CA				
893	Energy saving monitor reference (motor capacity)	Applicable motor capacity		Motor capacity (Pr.80)		0.01 kW	
C14 (918)	Terminal 1 gain frequency (speed)	60 Hz	50 Hz	Rated motor rotations per minute*3	Rated motor frequency*3	1 r/min	0.01 Hz
1121	Per-unit speed control reference frequency	120 Hz		Maximum motor rotations per minute*3	Maximum motor frequency*3	1 r/min	0.01 Hz

*1 110% for SLD, 120% for LD, 150% for ND, and 200% for HD (Refer to **Pr.570 Multiple rating setting** on the Instruction Manual (Detailed).)
*2 When a value other than "9999" is set, the set value is not changed.
*3 The rated motor rotations per minute (frequency), maximum motor rotations per minute (frequency), number of motor poles, and rated motor current are as follows.

Item	0.75kW	1.5kW or higher
Rated motor rotations per minute (frequency)	3000 r/min (100 Hz)	3000 r/min (150 Hz)
Maximum motor rotations per minute (frequency)	4000 r/min (133.33 Hz)	4000 r/min (200 Hz)
Number of motor poles	4	6
Rated motor current	0.75kW: 3.3 A, 1.5kW: 6.1 A, 2.2kW: 9.3 A, 3.7kW: 16.5 A, 5.5kW: 22.0 A, 7.5kW: 31.0 A	

NOTE

- If IPM parameter initialization is performed in rotations per minute (**Pr.998** = "3044"), the parameters not listed in the table and the monitored items are also set and displayed in rotations per minute.

◆ Specification comparison between PM sensorless vector control and induction motor control

Item	PM sensorless vector control (EM-A)		Induction motor control
Applicable motor	PM motor EM-A series (0.75 to 7.5 kW) (Refer to **page 204**.) IPM motors other than EM-A (tuning required) *1		Induction motor *1
Starting torque	High frequency superposition control	200%	200% (FR-A820-00250(3.7K) or lower and FR-A840-00126(3.7K) or lower). 150% (FR-A820-00340(5.5K) or higher and FR-A840-00170(5.5K) or higher) under Real sensorless vector control and vector control
	Current synchronization operation	50%	
Zero speed	High frequency superposition control	Available (200%)	Available under Real sensorless vector control and vector control
	Current synchronization operation	Not available	
Carrier frequency	High frequency superposition control	Fixed to 6 kHz.	FR-A820-03160(55K) or lower, FR-A840-01800(55K) or lower : Any value in the range of 0.75 kHz to 14.5 kHz FR-A820-03800(75K) or higher, FR-A840-02160(75K) or higher : 0.75 kHz to 6 kHz
	Current synchronization operation	2 kHz (**Pr.72** = "0 to 5"), 6 kHz (**Pr.72** = "6 to 8"), 10 kHz (**Pr.72** = "9 to 15")	
Automatic restart after instantaneous power failure	No startup delay time. Using the regeneration avoidance function or retry function together is recommended.		Startup waiting time exists.
Startup delay	Startup delay of about 0.1 second for magnetic pole position detection.		No startup delay (when online auto tuning is not performed at startup).
Driving by the commercial power supply	Cannot be driven by the commercial power supply.		Can be driven by the commercial power supply. (Other than vector control dedicated motor.)
Operation during coasting	While the motor is coasting, potential is generated across motor terminals.		While the motor is coasting, potential is not generated across motor terminals.
Torque control	Not available		Available under Real sensorless vector control and vector control
Position control	High frequency superposition control	Available (sensorless)	Available under vector control.
	Current synchronization operation	Not available	

*1 The rated motor current should be equal to or less than the inverter rated current. (It must be 0.4 kW or higher.) Using a motor with the rated current substantially lower than the inverter rated current will cause torque ripples, etc. and degrade the speed and torque accuracies. As a reference, select the motor with the rated motor current that is about 40% or higher of the inverter rated current.

NOTE

- Before wiring, make sure that the motor is stopped. Otherwise an electric shock may occur.
- Never connect a PM motor to the commercial power supply.
- No slippage occurs with a PM motor because of its characteristic. If a PM motor, which took over an induction motor, is driven at the same speed as for the induction motor, the running speed of the PM motor becomes faster by the amount of the induction motor's slippage. Adjust the speed command to run the PM motor at the same speed as the induction motor, as required.

Countermeasures against deterioration of the 400 V class motor insulation

When driving a 400 V class motor by the inverter, surge voltages attributable to the wiring constants may occur at the motor terminals, deteriorating the insulation of the motor. When the 400 V class motor is driven by the inverter, consider the following countermeasures:

◆ With induction motor

It is recommended to take one of the following countermeasures:

◆ Rectifying the motor insulation and limiting the PWM carrier frequency according to the wiring length

For the 400 V class motor, use an insulation-enhanced motor.
The Mitsubishi Electric high-efficiency motor SF-HR, the Mitsubishi Electric constant-torque motor SF-HRCA, and the Mitsubishi Electric high-performance energy-saving motor SF-PR are insulation-enhanced motors as standard.
Specifically,

- Order a "400 V class inverter-driven insulation-enhanced motor".
- For the dedicated motor such as the constant-torque motor and low-vibration motor, use an "inverter-driven dedicated motor".
- Set **Pr.72 PWM frequency selection** as indicated below according to the wiring length.

Inverter	Wiring length 50 m or shorter	Wiring length 50 m to 100 m	Wiring length longer than 100 m
Standard model	15 (14.5 kHz) or lower	9 (9 kHz) or lower	4 (4 kHz) lower
IP55 compatible model			
Slim model			
Separated converter type	6 (6 kHz) or lower	6 (6 kHz) or lower	4 (4 kHz) lower
Slim model (separated converter type)			

◆ Suppressing the surge voltage on the inverter side

- For FR-A840-01800(55K) or lower, connect a surge voltage suppression filter (FR-ASF-H/FR-BMF-H) at the output side of the inverter.
- For FR-A840-02160(75K) or higher, connect a sine wave filter (MT-BSL/BSC) at the output side of the inverter.

◆ With PM motor

Set **Pr.72 PWM frequency selection** as indicated below according to the wiring length.

Applicable Inverter	Wiring length	
	50 m or shorter	50 m to 100 m
FR-A840-00023(0.4K), 00038(0.75K)	0 (2 kHz) to 15 (14 kHz)	5 (2 kHz) or lower
Others	0 (2 kHz) to 15 (14 kHz)	9 (6 kHz) or lower

NOTE

- A surge voltage suppression filter (FR-ASF-H/FR-BMF-H) can be used under V/F control and Advanced magnetic flux vector control.
  A sine wave filter (MT-BSL/BSC) can be used under V/F control. Do not use the filters under unspecified controls.

Application to special motors

◆ Motors with brake

Use the motor with brake having independent power supply for the brake, connect the brake power supply to the inverter primary side power and make the inverter output off using the output stop terminal (MRS) when the brake is applied (motor stop). Rattle may be heard according to the type of the brake in the low speed region but it is not a fault.

◆ Pole changing motor

As this motor differs in rated current from the standard motor, confirm the maximum current of the motor and select the inverter. Be sure to change the number of poles after the motor has stopped. If the number of poles is changed during rotation, the regenerative overvoltage protection circuit may be activated to cause an inverter alarm, coasting the motor to a stop.

◆ Submersible motor

Since the motor rated current is larger than that of the standard motor, make selection of the inverter capacity carefully. In addition, the wiring distance between the motor and inverter may become longer, refer to **page 181** to perform wiring with a cable thick enough. Leakage current may flow more than the land motor, take care when selecting the earth leakage current breaker.

◆ Explosion-proof motor

To drive an explosion-proof type motor, an explosion-proof test of the motor and inverter together is necessary. The test is also necessary when driving an existing explosion-proof motor.
The inverter is a non-explosion proof structure, install it in a safety location.

◆ Geared motor

The continuous operating rotation range of this motor changes depending on the lubrication system and maker. Especially in the case of oil lubrication, continuous operation in the low-speed range only can cause gear seizure. For fast operation at higher than 60 Hz, please consult the motor maker.

◆ Synchronous motor other than PM motor

This motor is not suitable for applications of large load variation or impact, where out-of-sync is likely to occur. Please contact your sales representative when using this motor because its starting current and rated current are greater than those of the standard motor and will not rotate stably at low speed.

◆ Single phase motor

The single phase motor is not suitable for variable operation by the inverter.
For the capacitor starting system, the capacitor may be damaged due to harmonic current flowing to the capacitor. For the split-phase starting system and repulsion starting system, not only output torque is not generated at low speed but it will result in starting coil burnout due to failure of centrifugal force switch inside. Replace with a three-phase motor for use.

Compatibility

Major differences from the FR-A700 series

Item		FR-A700	FR-A800
Control method		V/F control Advanced magnetic flux vector control Real sensorless vector control Vector control (with plug-in option) PM sensorless vector control (IPM motor)	V/F control Advanced magnetic flux vector control Real sensorless vector control Vector control (with plug-in option/control terminal option) PM sensorless vector control (IPM motor/SPM motor)
Added functions		—	USB host function Safety stop function PLC function etc.
Brake transistor (brake resistor usable)		Built in for the FR-A720-0.4K to 22K Built in for the FR-A740-0.4K to 22K	Built in for the FR-A820-00046(0.4K) to 01250(22K) Built in for the FR-A840-00023(0.4K) to 01800(55K)
Maximum output frequency	V/F control	400 Hz	590 Hz
	Advanced magnetic flux vector control	120 Hz	400 Hz
	Real sensorless vector control	120 Hz	400 Hz
	Vector control	120 Hz	400 Hz
	PM sensorless vector control	300 Hz	400 Hz
PID control		Turn the X14 signal ON to enable PID control.	When the X14 signal is not assigned, just set a value in **Pr.128** to enable PID control. When the X14 signal is assigned, turn the X14 signal ON while **Pr.128** ≠ "0" to enable PID control. The PID pre-charge function and dancer control are added.
Automatic restart after instantaneous power failure		Turn the CS signal ON to enable restart.	CS signal assignment not required. (Restart is enabled with the **Pr.57** setting only.)
Number of motor poles V/F control switching		The V/F switching signal (X18) is valid when **Pr.81** = "12 to 20 (2 to 10 poles)".	**Pr.81** = "12 (12 poles)" X18 is valid regardless of the **Pr.81** setting. (The **Pr.81** settings "14 to 20" are not available.)
PTC thermistor input		Input from terminal AU (The function of terminal AU is switched by a switch.)	Input from terminal 2. (The function of terminal 2 is switched by the **Pr.561** setting.)
USB connector		B connector	Mini B connector
Control circuit terminal block		Removable terminal block (screw type)	Removable terminal block (spring clamp type)
Terminal response level		The FR-A800's I/O terminals have better response level than the FR-A700's terminals. By setting **Pr.289 Inverter output terminal filter** and **Pr.699 Input terminal filter**, the terminal response level can be compatible with that of FR-A700. Set to approximately 5 to 8 ms and adjust the setting according to the system.	
PU		FR-DU07 (4-digit LED) FR-PU07	FR-DU08 (5-digit LED) FR-LU08 (LCD operation panel) FR-PU07 (Some functions are limited or not available.) FR-DU07 is not supported.
Plug-in option		Dedicated plug-in options (not interchangeable)	
Communication option		Connected to the connector 3	Connected to the connector 1
Installation size		For standard models, installation size is compatible for all capacities. (Replacement between the same capacities does not require new mounting holes.) For separated converter types, installation size is not compatible. (New mounting holes are required.)	
Converter		Built-in for all capacities	An optional converter unit (FR-CC2) is required for separated converter types.
DC reactor		The 75K or higher comes with a DC reactor (FR-HEL).	For the FR-A820-03800(75K) or higher, the FR-A840-02160(75K) or higher, and when a 75 kW or higher motor is used, select a DC reactor suitable for the applicable motor capacity. (A DC reactor is not included.) Separated converter types (converter unit FR-CC2) and IP55 compatible models have a built-in DC reactor.
Brake unit (75 kW or higher)		FR-BU2, MT-BU5	FR-BU2

◆ Installation precautions

- Removal procedure of the front cover is different. (Refer to the Instruction Manual.)
- Plug-in options of the FR-A700 series are not compatible.
- Operation panel (FR-DU07) cannot be used.

◆ Wiring precautions

- The screw type terminal block has changed to the spring clamp type. Use of blade terminals is recommended.

◆ Instructions for continuous use of the FR-PU07 (parameter unit) manufactured in September 2015 or earlier

- For the FR-A800 series, many functions (parameters) have been added. When setting these parameters, the parameter names and setting ranges are not displayed.
- Only the parameter with the numbers up to "999" can be read and set. The parameters with the numbers after "999" cannot be read or set.
- Many protective functions have been added for the FR-A800 series. These functions are available, but all faults are displayed as "Fault". When the fault history is checked, "ERR" appears. Added faults will not appear on the parameter unit. (However, MT1 to MT3 are displayed as MT.)
- Parameter copy/verification function are not available.

For information on the restrictions on the purchase of the FR-PU07, refer to the Instruction Manual of the FR-PU07.

◆ Copying parameter settings

- The FR-A700 series' parameter settings can be easily copied to the FR-A800 series by using the setup software (FR Configurator2). (Not supported by the setup software FR-SW3-SETUP or older.)

Comparison with the FR-A700 series in functions

Parameter/function	Major differences from the FR-A700			Remarks
	Addition	Modification	Related parameter	
Maximum frequency		○	**Pr.1** etc.	Max. 590 Hz (Max. 400 Hz under other than V/F control)
Free thermal (electronic thermal O/L relay)	○		**Pr.600 to Pr.604, Pr.692 to Pr.696**	Thermal characteristics can be freely set.
PTC thermistor		○	**Pr.561**	The protection level can be set by parameters.
Increased magnetic excitation deceleration	○		**Pr.660 to Pr.662**	Loss of the motor is increased to reduce regenerative power.
4 mA input check	○		**Pr.573, Pr.777, Pr.778**	Loss of 4 mA input is detected.
Input terminal filter	○		**Pr.699**	The terminal response can be adjusted.
Output terminal filter	○		**Pr.289**	The terminal response can be adjusted.
Remote output terminal (analog)	○		**Pr.655 to Pr.659**	Optional analog output
Parameter display by group	○		**Pr.Md**	The parameters are displayed in the conventional numerical order in the initial state.
Speed smoothing	○		**Pr.653, Pr.654**	Machine resonance is reduced.
Traverse function	○		**Pr.592 to Pr.597**	Only speed control is available under vector control.
USB host (USB memory connection)	○		**Pr.1049**	Parameter read/copy, data logging, execution of the ladder in the USB (PLC function), etc.
Second PID control	○		**Pr.753 to Pr.758, Pr.1134, Pr.1135, Pr.1140, Pr.1141, Pr.1143 to Pr.1149**	
PID pre-charge function	○		**Pr.760 to Pr.769**	
PID output suspension function	○		**Pr.575 to Pr.577**	
PLC function	○		**Pr.414 to Pr.417, Pr.498, Pr.1150, Pr.1199**	
Maintenance timer		○	**Pr.503, Pr.504, Pr.686 to Pr.689**	Up to three timers can be set.
Fault initiation	○		**Pr.997**	Faults can be initiated.
Multiple rating selection	○		**Pr.570**	The rating can be selected from SLD, LD, ND, or HD.
Fast-response operation selection	○		**Pr.800**	High response of the vector control, real sensorless vector control, and PM sensorless vector control
24 V external power supply input	○		—	Operation is unavailable. (Communication and parameter setting are available.)
Cooling fan operation selection		○	**Pr.244**	Waiting time at stop can be changed.
GOT automatic recognition	○		—	The GOT2000 series is supported.
Optimum excitation control mode	○		**Pr.60**	

Major differences between the standard model (FR-A840) and the separated converter type (FR-A842)

Item	FR-A842	Remarks (FR-A840)
Pr.30 Regenerative function selection	Setting ranges "2, 10, 11, 102, 110, 111" Initial value "10"	Setting ranges "0 to 2, 10, 11, 20, 21, 100, 101, 110, 111, 120, 121" Initial value "0"
Pr.70 Special regenerative brake duty	Without the parameter	
Monitor function (Pr.52, Pr.54, Pr.158, Pr.774 to Pr.776, Pr.992, Pr.1027 to Pr.1034)	Regenerative brake duty: Without (Unacceptable)	
Input terminal function selection (Pr.178 to Pr.189)	DC feeding operation permission (X70), DC feeding cancel (X71): Without (Unacceptable)	
Pr.187 MRS terminal function selection	Initial value "10" (X10)	Initial value "24" (MRS)
Output terminal function selection (Pr.190 to Pr.196, Pr.313 to Pr.322)	Instantaneous power failure/undervoltage (IPF), Regenerative brake pre-alarm (RBP), DC current feeding (Y85), Main circuit capacitor life (Y87), Inrush current limit circuit life (Y89), Estimated residual-life of main circuit capacitor (Y248): Without (Unacceptable)	
Pr.192 IPF terminal function selection	Initial value "9999" (No function)	Initial value "2" (IPF)
Inrush current limit circuit life display, Main circuit capacitor life display (Pr.256, Pr.258, Pr.259, Pr.506)	Without the parameter	
Pr.599 X10 terminal input selection	Initial value "1"(NC contact specification)	Initial value "0" (NO contact specification)
Pr.872 Input phase loss protection selection	Without the parameter	
Warning, protective functions	Regenerative brake pre-alarm (RB), Instantaneous power failure (E.IPF), Undervoltage (E.UVT), Input phase loss (E.ILF), Brake transistor alarm detection (E.BE), Inrush current limit circuit fault (E.IOH): Not available	

Major differences between the standard model (FR-A840) and the IP55 compatible model (FR-A846)

Item		FR-A840	FR-A846
Protective structure		Enclosed type (IP20): FR-A840-00620(22K) or lower Open type (IP00): FR-A840-00770(30K) or higher	Dust-proof and waterproof type (IP55): All capacities
DC reactor		Optional	Built-in
Internal air circulation fan		Without	With
Protective function		—	Internal fan alarm (FN2), Abnormal internal temperature (E.IAH)
Circuit board coating (conforming to IEC60721-3-3:1994 3C2/3S2)		With / Without (Selectable)	With
Environment	Surrounding air temperature	LD, ND, HD rating: -10°C to +50°C (non-freezing) SLD rating: -10°C to +40°C (non-freezing)	LD, ND rating: -10°C to +40°C (non-freezing)
	Surrounding air humidity	With circuit board coating: 95% RH or less (non-condensing) Without circuit board coating: 90% RH or less (non-condensing)	95% RH or less (non-condensing)
Brake transistor (usable brake resistor)		Built-in for the FR-A820-00046(0.4K) to 01250(22K) Built-in for the FR-A840-00023(0.4K) to 01800(55K)	Without (Brake resistor is not applicable.)
Multiple rating (Pr.570 Multiple rating setting)		SLD, LD, ND (initial setting), HD rating (Setting range: "0 to 3")	LD, ND (initial setting) rating (Setting range: "1 or 2")
Pr.30 Regenerative function selection		Setting range: "0 to 2, 10, 11, 20, 21, 100, 101, 110, 111, 120, or 121"	Setting range: "0, 2, 10, 20, 100, 110, or 120"
Pr.70 Special regenerative brake duty		Available	Not available
Regenerative brake duty (Pr.52, Pr.54, Pr.158, Pr.774 to Pr.776, Pr.992, Pr.1027 to Pr.1034 setting "9")		Available (can be set)	Not available (cannot be set)
Operation panel		FR-DU08: IP40 (except for the PU connector section)	FR-DU08-01: IP55 (except for the PU connector section)

Major differences between the FR-A800 (RS-485 communication model) and the FR-A800-E (Ethernet communication model)

Item	FR-A800 (RS-485 communication model)	FR-A800-E (Ethernet communication model)
Standard equipment	RS-485 terminals	Ethernet connector
Communication	MODBUS RTU protocol	MODBUS/TCP MELSOFT / FA product connection SLMP iQSS CC-Link IE Field Network Basic
Number of connectable plug-in options	3	2 (initial status)
Optional screw-type terminal block (FR-A8TR)	Can be used.	Cannot be used.

Major differences between the FR-A800-F (safety communication model) and the FR-A800/FR-A800-E

Item		FR-A800-F (with safety communication option (FR-A8NCG-S) installed)	FR-A800/FR-A800-E
Safety communication		CC-Link IE TSN	Not supported
Safety performance		PLe SIL3 (PLd SIL2 without the option installed)	PLe SIL3/PLd SIL2 (depending on the SERIAL)
Functional safety		STO, SS1-t	STO only
Fault display without safety communication option installed		E.SAF	Not supported
Communication option fault		E.SAF	E.OP1 to 3
Separate power supply via terminals R1/L11 and S1/L21 24 V external power supply input		Restricted*1	Not restricted
Terminal SO output		Disabled (always OFF)	Enabled
Plug-in option		Restricted*2	Not restricted
Control terminal option		Available (FR-A8TP, FR-A8TR)	Available (FR-A8TP, FR-A8TR*3, FR-A8TAT*3)
SW3/SW4 (initial state)		ON/ON	OFF/OFF
Pr.359 Encoder rotation direction	Initial setting	0	1

*1 When a power supply is provided for the control circuit separately (power supply via terminals R1/L11 and S1/L21 or 24 V external power supply input) while the main circuit power is OFF, a protective function (E.SAF) is activated by a safety sub-function. While both the main circuit power and the 24 V external power are OFF, E.SAF can be canceled by turning ON the main circuit power.
*2 Communication options are not available.
*3 Not available for the Ethernet models.

Major differences between the FR-A840M (slim model) and the FR-A840

Item	FR-A840M	FR-A840
Surrounding air temperature	-10°C to +40°C (non-freezing)	-10°C to +50°C (non-freezing) for LD, ND (initial setting), or HD rating -10°C to +40°C (non-freezing) for SLD rating
Altitude*1	Maximum 4000 m	Maximum 2500 m
Vibration	Frequency range 10 to 57 Hz: maximum amplitude 0.075 mm. Frequency range 57 to 150 Hz: maximum acceleration speed 1G.	2.9 m/s^2 or less at 10 to 55 Hz (in X, Y, and Z directions) for the FR-A840-04320(160K) or higher
Protective structure	IP20 (IP55 between internal and external air regions) for all capacities	Open type (IP00) for FR-A840-00770(30K) or higher
Brake transistor (brake resistor usable)	Built-in brake transistor model is available.	Built-in for the FR-A840-00023(0.4K) to 03160(55K)
EMC filter	Class C3 filter is built in. (The inverter with a built-in Class C2 filter is also available.)	Class C3 filter is built in.
DC reactor	Built-in	Optional
Noise level (dB)	73.4	61.2 for the FR-A840-04810(185K)
PWM carrier frequency automatic reduction function (Pr.260 PWM frequency automatic switchover)	Current value to enable the function for each rating: 50% or higher	Current value to enable the function for each rating: 85% or higher
Multiple ratings (Pr.570 Multiple rating setting)	SLD and ND (initial setting) ratings (Setting range: "0 or 2")	SLD, LD, ND (initial setting) and HD ratings (Setting range: "0 to 3")
Protective function (E.IPF (Instantaneous power failure))	Activated when a power failure occurs for longer than 10 ms.	Activated when a power failure occurs for longer than 15 ms.

*1 For the installation at an altitude above 1000 m, consider a 3% reduction in the rated current per 500 m increase in altitude.

Major differences between the FR-A842M (separated converter type, slim model) and the FR-A842

Item	FR-A842M	FR-A842
Compatible converter unit*1	FR-CC2M	FR-CC2
Surrounding air temperature	-10°C to +55°C*2*3 (non-freezing)	LD, ND (initial setting), HD: -10°C to +50°C (non-freezing) SLD: -10°C to +40°C (non-freezing)
Storage temperature	-40°C to +65°C	-20°C to +65°C
Altitude	Maximum 4000 m*4	Maximum 2500 m*4
Protective structure	Open type IP20 (for IEC 60529 only)	Open type (IP00)
Brake transistor (brake resistor usable)	Built-in brake transistor model is available for the FR-A842M-06440(315K) or lower	Unavailable
Output terminal function selection (Pr.190 to Pr.196, Pr.313 to Pr.322)	Regenerative brake pre-alarm (RBP): Available*5	Regenerative brake pre-alarm (RBP): Not available
PWM carrier frequency automatic reduction function (Pr.260 PWM frequency automatic switchover)	Current value to enable the function for each rating: Output frequency ≤ 5 Hz: 50% or higher 5 Hz < Output frequency ≤ 10 Hz: 60% or higher 10 Hz < Output frequency: 70% or higher	Current value to enable the function for each rating: 85% or higher
Multiple ratings (Pr.570 Multiple rating setting)	SLD and ND (initial setting) ratings Setting range: "0 or 2"	SLD, LD, ND (initial setting) and HD ratings Setting range: "0 to 3"
Warning	Regenerative brake pre-alarm (RB): Available*5	Regenerative brake pre-alarm (RB): Not available
Protective functions	Brake transistor alarm detection (E.BE): Available*5	Brake transistor alarm detection (E.BE): Not available
Internal circuit fault (E.13)	Main circuit fuse melting detection: Available	Main circuit fuse melting detection: Not available

*1 The FR-A842 inverters cannot be used with the FR-CC2M converter units, and the FR-A842M inverters cannot be used with the FR-CC2 converter units.
*2 -10°C to +50°C when the safety stop function is used.
*3 For use at a temperature above 40°C, consider a 2% reduction in the rated current per 1°C increase in temperature.
*4 For installation at an altitude above 1000 m, consider a 3% reduction in the rated current per 500 m increase in altitude.
*5 Available for the built-in brake transistor model only.

Major differences between the FR-CC2M (slim model) and the FR-CC2

Item	FR-CC2M	FR-CC2
Applicable capacity (kW)	250 to 560	315 to 630
Positions of main circuit terminals	Upper of the unit (P/+, N/-), lower of the unit (R/L1, S/L2, T/L3)	Lower of the unit (P/+, N/-, R/L1, S/L2, T/L3)
Protective structure	Open type IP20 (for IEC 60529 only)	Open type IP00 (for IEC 60529 only)
Surrounding air temperature	-10°C to +55°C*1 (non-freezing)	FR-CC2-H315K to H560K: -10°C to +50°C (non-freezing) FR-CC2-H630K: -10°C to +40°C (non-freezing)
Altitude	Maximum 4000 m*2	Maximum 2500 m*2

*1 For use at a temperature above 40°C, consider a 2% reduction in the rated current per 1°C increase in temperature.
*2 For installation at an altitude above 1000 m, consider a 3% reduction in the rated current per 500 m increase in altitude.

Major differences between the standard inverter and the inverter with parallel operation function

The following functions of the FR-A800 standard inverter are changed in the FR-A842-P.

Function name	Description
FWD and REV keys on the operation panel	The FWD and REV keys on the operation panel of the slave are disabled.
Mitsubishi inverter protocol communication	Since RS-485 terminals are used for RS-485 communication between the master and slave inverters, communication using the Mitsubishi inverter protocol through the RS-485 terminals is not available.
MODBUS RTU protocol communication	The MODBUS RTU protocol communication is not available.
Safety stop function	The safety stop function is not supported.
High speed maximum frequency (Pr.18)	The upper limit of the output frequency is 120 Hz. Even if a value higher than 120 Hz is set as a high speed maximum frequency, the setting is fixed to 120 Hz.
Current monitoring reference (Pr.56)	The initial value of **Pr.56** varies according to the setting in **Pr.1001 Parallel operation selection** as follows. • Inverter rated current × Number of the inverters × 0.8 when **Pr.1001** = "200 or 300" • Inverter rated current × 0.8 when **Pr.1001** = "1 or 2"
Optimum excitation control (Pr.60)	The Optimum excitation control mode (**Pr.60** = "9") is not available.
Reference current (Pr.61)	It is determined by the following formula: Inverter rated current × Number of the inverters × 0.8, when **Pr.61** = "9999 (initial value)"
Applied motor (Pr.71 (Pr.450))	The electronic thermal relay characteristic when **Pr.71** (**Pr.450**) = "8090, 8093, 8094, 9090, 9093, or 9094" is the same as that the standard motor.
Carrier frequency (Pr.72)	The carrier frequency is fixed at 2 kHz. It cannot be changed using parameters.
PU stop selection (Pr.75)	The setting for PU stop selection (**Pr.75**) in the slave inverter is invalid. (The setting of **Pr.75** in the master inverter is applied to the slave inverter.) • When the STOP/RESET key on PU of the slave inverter is pressed while **Pr.75** of the master inverter = "14 to 17 or 114 to 117", the motor decelerates to stop regardless of the inverter's operation mode and the warning "PS" (PU stop) indication appears on the slave inverter. The "PS" can be reset on the master inverter. • When **Pr.75** of the master inverter = "0 to 3, 100 to 103", the motor does not stop by pressing the STOP/RESET key on the PU of the slave inverter even if the inverters are in the PU operation mode.
Auto tuning setting/status (Pr.96)	Tuning is not available although "101" (offline tuning with motor rotation) is set in **Pr.96**.
PID action selection (Pr.128 (Pr.753))	When **Pr.128** (**Pr.753**) of the slave inverter ≠ "2000, 2001, 2010, or 2011" , the PID action selection function of the slave inverter is invalid.
Bypass selection at a fault (Pr.138)	Setting "1" in **Pr.138** of the master inverter enables automatic switchover to commercial power supply operation when a protective function (E.OHT or E.CPU) is activated in the slave inverter. Install a thermal relay to the master inverter to protect the motor from overheating.
Output current detection level (Pr.150), Zero current detection level (Pr.152)	The result of the following formula corresponds to "100" (100%) of **Pr.150** (Output current detection level) and **Pr.152** (Zero current detection level) in the master inverter: Inverter rated current × Number of the inverters × 0.8.
Fast-response current limit (Pr.156)	This function is not available.
Frequency setting / key lock operation selection (Pr.161)	Regardless of the **Pr.161** setting of the slave inverter, the setting dial frequency setting mode and setting dial potentiometer mode are disabled on the slave inverter. (The function to lock the operation panel keys is available.)
Automatic restart after instantaneous power failure selection (Pr.162)	Even when a value other than "3 or 13" is set in **Pr.162**, a frequency search (reduced impact restart) is performed.
Slip compensation (Pr.245 to Pr.247)	To use the slip compensation function, set the motor capacity in **Pr.80** (**Pr.453**) of the master in advance.
Self power management selection (Pr.248)	When "2" is set in **Pr.248** of the master inverter, the MC1 signal turns OFF when the circuit failure protective function or E.PA1/E.PA2 (Parallel operation slave 1 fault / Parallel operation slave 2 fault) is activated.
High-speed setting maximum current (Pr.271), Middle-speed setting minimum current (Pr.272)	During operation with the X19 signal ON, when the average current of the current averaging range becomes equal to or less than the result of the following formula 1: Inverter rated current × Number of the inverters × 0.8 × **Pr.271** setting (%), the maximum frequency is automatically defined as the setting of **Pr.4 Multi-speed setting (high speed)**. During operation with the X19 signal ON, when the average current of the current averaging range becomes equal to or more than the result of the following formula 2: Inverter rated current × Number of the inverters × 0.8 × **Pr.272** setting (%), the maximum frequency is automatically defined as the setting of **Pr.5 Multi-speed setting (middle speed)**. When the average current is more than the result of the formula 1 and less than the result of the formula 2, linear compensation is performed.
Stop mode selection at communication error (Pr.502), Operation frequency during communication error (Pr.779)	The settings of **Pr.502** and **Pr.779** does not affect communication between the inverters via the RS-485 terminals. (The setting affects only communication via the communication option.)
PU mode operation command source selection (Pr.551)	The command source is the PU connector when **Pr.551** = "1" and the inverters are in the PU operation mode. When a USB memory device is connected, the command source is the USB connector.
Multiple rating setting (Pr.570)	The SLD and HD ratings are not supported. When "0 or 3" is set in **Pr.570**, the ND rating is applied.
Control method selection (Pr.800 (Pr.451))	The PM sensorless vector control is not available. When **Pr.800** (**Pr.451**) = "13, 14, 113, or 114", Real sensorless vector control is applied.
Fast-response operation (Pr.800 (Pr.451))	Even if the fast-response operation is selected in **Pr.800** (**Pr.451**), the normal-response operation is applied.

Warranty

When using this product, make sure to understand the warranty described below.

1. Warranty period and coverage

We will repair any failure or defect (hereinafter referred to as "failure") in our FA equipment (hereinafter referred to as the "Product") arisen during warranty period at no charge due to causes for which we are responsible through the distributor from which you purchased the Product or our service provider. However, we will charge the actual cost of dispatching our engineer for an on-site repair work on request by customer in Japan or overseas countries. We are not responsible for any on-site readjustment and/or trial run that may be required after a defective unit are repaired or replaced.

[Term]

The term of warranty for Product is twelve months after your purchase or delivery of the Product to a place designated by you or eighteen months from the date of manufacture whichever comes first ("Warranty Period"). Warranty period for repaired Product cannot exceed beyond the original warranty period before any repair work.

[Limitations]

(1) You are requested to conduct an initial failure diagnosis by yourself, as a general rule. It can also be carried out by us or our service company upon your request and the actual cost will be charged.
However, it will not be charged if we are responsible for the cause of the failure.
(2) This limited warranty applies only when the condition, method, environment, etc. of use are in compliance with the terms and conditions and instructions that are set forth in the instruction manual and user manual for the Product and the caution label affixed to the Product.
(3) Even during the term of warranty, the repair cost will be charged on you in the following cases;
1) a failure caused by your improper storing or handling, carelessness or negligence, etc., and a failure caused by your hardware or software problem
2) a failure caused by any alteration, etc. to the Product made on your side without our approval
3) a failure which may be regarded as avoidable, if your equipment in which the Product is incorporated is equipped with a safety device required by applicable laws and has any function or structure considered to be indispensable according to a common sense in the industry
4) a failure which may be regarded as avoidable if consumable parts designated in the instruction manual, etc. are duly maintained and replaced
5) any replacement of consumable parts (condenser, cooling fan, etc.)
6) a failure caused by external factors such as inevitable accidents, including without limitation fire and abnormal fluctuation of voltage, and acts of God, including without limitation earthquake, lightning and natural disasters
7) a failure caused by using the emergency drive function
8) a failure generated by an unforeseeable cause with a scientific technology that was not available at the time of the shipment of the Product from our company
9) any other failures which we are not responsible for or which you acknowledge we are not responsible for

2. Term of warranty after the stop of production
(1) We may accept the repair at charge for another seven (7) years after the production of the product is discontinued. The announcement of the stop of production for each model can be seen in our Sales and Service, etc.
(2) Please note that the Product (including its spare parts) cannot be ordered after its stop of production.

3. Service in overseas
Our regional FA Center in overseas countries will accept the repair work of the Product; however, the terms and conditions of the repair work may differ depending on each FA Center. Please ask your local FA center for details.

4. Exclusion of loss in opportunity and secondary loss from warranty liability
Regardless of the gratis warranty term, Mitsubishi Electric shall not be liable for compensation to:
(1) Damages caused by any cause found not to be the responsibility of Mitsubishi Electric.
(2) Loss in opportunity, lost profits incurred to the user by Failures of Mitsubishi Electric products.
(3) Special damages and secondary damages whether foreseeable or not, compensation for accidents, and compensation for damages to products other than Mitsubishi Electric products.
(4) Replacement by the user, maintenance of on-site equipment, start-up test run and other tasks.

5. Change of Product specifications
Specifications listed in our catalogs, manuals or technical documents may be changed without notice.

6. Application and use of the Product
(1) For the use of our product, its applications should be those that may not result in a serious damage even if any failure or malfunction occurs in product, and a backup or fail-safe function should operate on an external system to product when any failure or malfunction occurs.

(2) Our product is designed and manufactured as a general purpose product for use at general industries.
Therefore, applications substantially influential on the public interest for such as atomic power plants and other power plants of electric power companies, and also which require a special quality assurance system, including applications for railway companies and government or public offices are not recommended, and we assume no responsibility for any failure caused by these applications when used.
In addition, applications which may be substantially influential to human lives or properties for such as airlines, medical treatments, railway service, incineration and fuel systems, man-operated material handling equipment, entertainment machines, safety machines, etc. are not recommended, and we assume no responsibility for any failure caused by these applications when used.
We will review the acceptability of the abovementioned applications, if you agree not to require a specific quality for a specific application. Please contact us for consultation.

Global FA Center

Mitsubishi Electric Corporation FA Centers support all our customers and users all over the world.

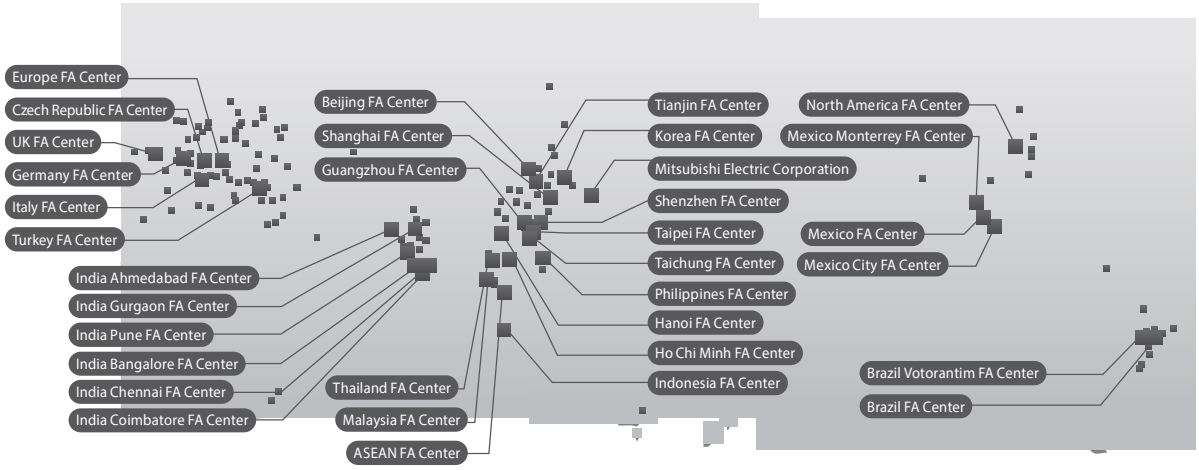

Japan (Tokyo)	FA Global Solution Technical Department
Japan (Tokyo)	Asian Business Development Department
China (Shanghai)	Mitsubishi Electric Automation (China) Ltd. Shanghai FA Center
China (Beijing)	Mitsubishi Electric Automation (China) Ltd. Beijing FA Center
China (Tianjin)	Mitsubishi Electric Automation (China) Ltd. Tianjin FA Center
China (Shenzhen)	Mitsubishi Electric Automation (China) Ltd. Shenzhen FA Center
China (Guangzhou)	Mitsubishi Electric Automation (China) Ltd. Guangzhou FA Center
Taiwan (Taichung)	Mitsubishi Electric Taiwan Co., Ltd.
Taiwan (Taipei)	Mitsubishi Electric Automation (TAIWAN) Co., Ltd
Korea	Mitsubishi Electric Automation Korea Co., Ltd.
ASEAN	Mitsubishi Electric Asia Pte. Ltd.
Malaysia	Malaysia FA Center
Indonesia	PT. Mitsubishi Electric Indonesia Cikarang Office
Vietnam (Hanoi)	Mitsubishi Electric Vietnam Company Limited Hanoi Branch Office
Vietnam (Ho Chi Minh)	Mitsubishi Electric Vietnam Company Limited
Thailand	Mitsubishi Electric Factory Automation (Thailand) Co., Ltd.
Philippines	MELCO Factory Automation Philippines Inc.
India (Pune)	Mitsubishi Electric India Pvt. Ltd. Pune Branch

India (Gurgaon)	Mitsubishi Electric India Pvt. Ltd. Gurgaon Head Office
India (Bangalore)	Mitsubishi Electric India Pvt. Ltd. Bangalore Branch
India (Chennai)	Mitsubishi Electric India Pvt. Ltd. Chennai Branch
India (Ahmedabad)	Mitsubishi Electric India Pvt. Ltd. Ahmedabad Branch
India (Coimbatore)	Mitsubishi Electric India Pvt. Ltd. Coimbatore Branch
North America	Mitsubishi Electric Automation, Inc.
Mexico	Mitsubishi Electric Automation, Inc. Queretaro Office
Mexico (Mexico City)	Mitsubishi Electric Automation, Inc. Mexico Branch
Mexico (Monterrey)	Mitsubishi Electric Automation, Inc. Monterrey Office
Brazil	Mitsubishi Electric do Brasil Comercio e Servicos Ltda.
Brazil (Votorantim)	MELCO CNC do Brasil Comercio e Servicos S.A.
Europe	Mitsubishi Electric Europe B.V. Polish Branch
Germany	Mitsubishi Electric Europe B.V. German Branch
UK	Mitsubishi Electric Europe B.V. UK Branch
Czech Republic	Mitsubishi Electric Europe B.V. Czech Branch
Italy	Mitsubishi Electric Europe B.V. Italian Branch
Turkey	Mitsubishi Electric Turkey Elektrik Urunleri A.S.

(As of September 2025)

For the latest information, refer to "Locations Worldwide" on the Mitsubishi Electric FA Global Website.
https://www.MitsubishiElectric.com/fa/about-us/overseas/index.html

This solution solves customers' issues and concerns by enabling visualization and analysis that lead to improvements and increase availability at production sites.

Utilizing our FA and IT technologies and collaborating with e-F@ctory Alliance partners, we reduce the total cost across the entire supply chain and engineeringchain, and support the improvement initiatives and one-step-ahead manufacturing of our customers.

FA integrated solutions reduce total cost

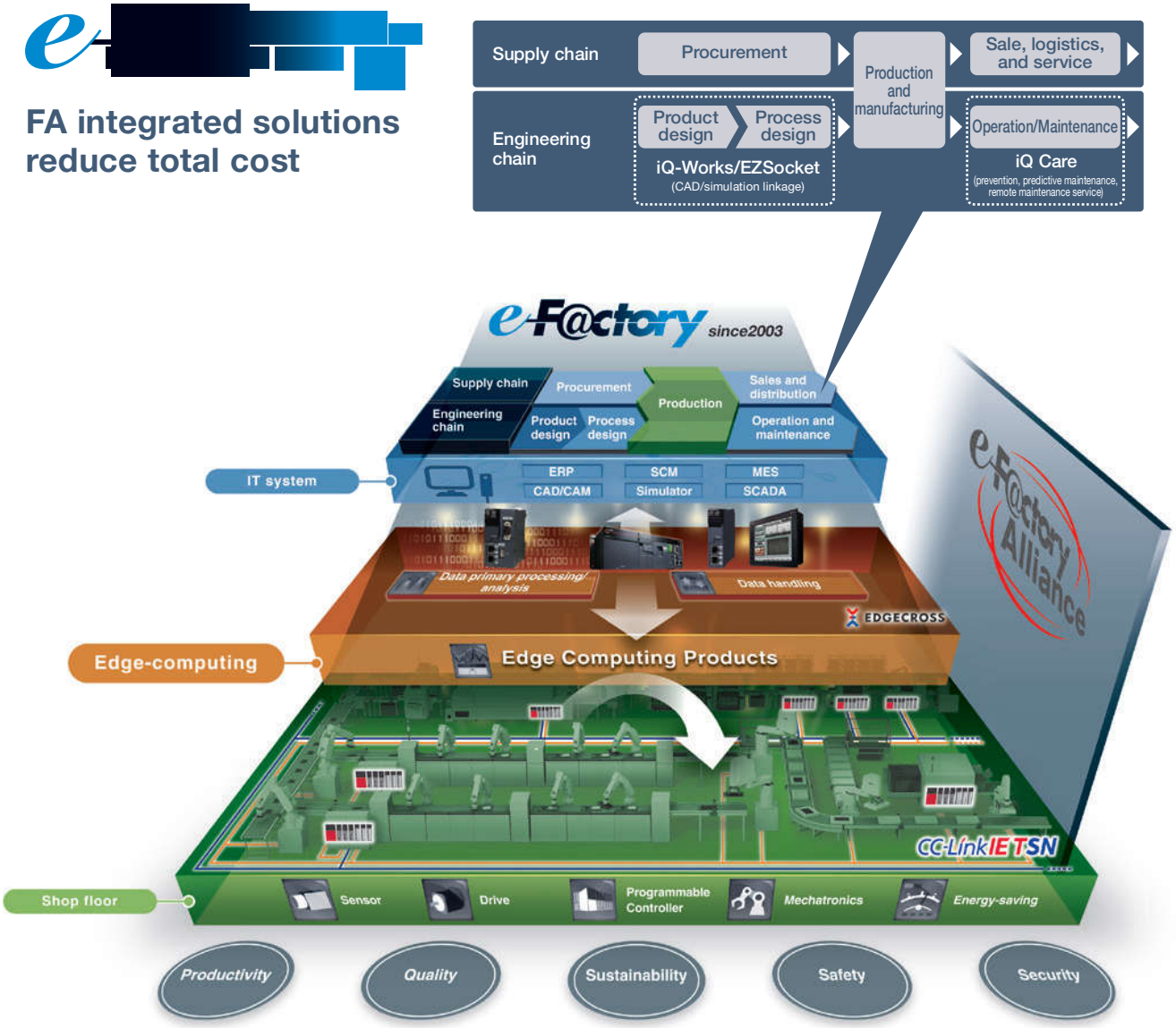

Overall production information is captured in addition to energy information, enabling the realization of efficient production and energy use (energy savings).

- **Trademarks**

  e-F@ctory is a trademark or registered trademark of Mitsubishi Electric Corporation.
  PROFIBUS is a registered trademark of PROFIBUS & PROFINET International.
  Device Net is a trademark of ODVA, Inc.
  MODBUS is a registered trademark of SCHNEIDER ELECTRIC USA, INC.
  Windows is a registered trademark of Microsoft Corporation in the United States and other countries.
  CC-Link IE TSN and CC-Link IE Field Network Basic are registered trademarks of the CC-Link Partner Association.
  Other company and product names herein are either trademarks or registered trademarks of their respective owners.

⚠Safety Warning

To ensure proper use of the products listed in this catalog, please be sure to read the instruction manual prior to use.

Creating Solutions Together.

Industrial Computer

Controllers

Computerized Numerical Controllers

Drive Products

Human Machine Interfaces

Robots

Low-voltage Power Distribution Products

Medium-voltage Power Distribution Products

Energy Saving Supporting Devices

Processing Machines: EDM, Lasers

Engineering and Solution Software

Mitsubishi Electric's FA division provides robust support for our customers' manufacturing needs. We offer a vast array of FA products, including industry-leading PLCs, control devices, drive devices, energy efficiency support equipment, power distribution control equipment, and industrial mechatronics. Our presence on every type of production floor enables us to assist in labor-saving initiatives and quality improvements, helping customers achieve sustainable manufacturing. We also address challenges such as decarbonization and labor shortages through the utilization of automation technology.

Additionally, by leveraging synergies among FA technologies, manufacturing expertise, and digital innovations, we aim to streamline the construction of systems for data collection, accumulation, and analysis. This contributes to reducing manufacturing and quality losses.

We enable flexible manufacturing processes that respect legacy systems while embracing innovations to drive optimization. As your solution partner, Mitsubishi Electric FA delivers high-performance, high-quality products that enhance your competitiveness.

Let's automate the world together!

Note: not all products are available in all countries

MITSUBISHI ELECTRIC CORPORATION

HEAD OFFICE: TOKYO BLDG., 2-7-3 MARUNOUCHI, CHIYODA-KU, TOKYO 100-8310, JAPAN

L-06075ENG-J (2603) MEE

Printed March 2026

All trademarks acknowledged.