Lighting: Floodlight, DFDM/ DFDS/ DFDH Series

Flameproof/ Increased Safety and Dust protection by enclosure

Zone 1 & 2 – 21 & 22

ALLOY ELECTRIC PRODUCTS — A QUALITY PRODUCT

Application

The DFD series has been designed for Zone 1, Zone 2, Zone 21, and Zone 22.

These efficient floodlights are suitable for illuminating large areas such as industrial complexes, ship loading zones, and hazardous environments.

Specification

Body material	:	Marine grade copper-free aluminium alloy with polyester powder coated, RAL 7032 (grey)
Lens	:	Heat and impact resistant clear glass
Bolts	:	Stainless steel, SS 304
Bracket	:	Hot-dip galvanized steel
Internal reflector	:	Anodized aluminium
Sealing (O-ring)	:	Silicone

Technical Data

Hazardous Area	Gas	Dust
Zones	1 & 2	21 & 22
Equipment Group/Category	II 2G	II 2D
Symbol of Protection	Ex db eb IIB T** Gb	Ex tb IIIC T** °C Db
Conformity to Standards	EN IEC 60079-0, EN 60079-1, EN IEC 60079-7, EN IEC 60079-31	
Ambient Temperature	-20°C to +55°C	
Index of Protection	IP66	
Entry Threads	1 hole standard (M20x1.5, M25x1.5, 1/2" NPT or 3/4" NPT), 2 holes are optional	
Mounting	Bracket mounting	
Connection	L, N and PE ; for 1-4 mm² cable	
Rated Voltage	220, 230 V AC ±5%, 50 Hz	

** See temperature class on catalogue number table.

Catalogue Number Logic

DFD ■ - ■■■ ■ - □□

Series	
DFDM	Mercury vapor
DFDS	High pressure sodium
DFDH	Metal halide

Lamp watt: (see ordering requirement table below)

Voltage	
2	220 V AC
3	230 V AC

Entry threads			
M1	M20x1.5	N1	1/2" NPT
M2	M25x1.5	N2	3/4" NPT

Luminous Intensity Distribution Curve

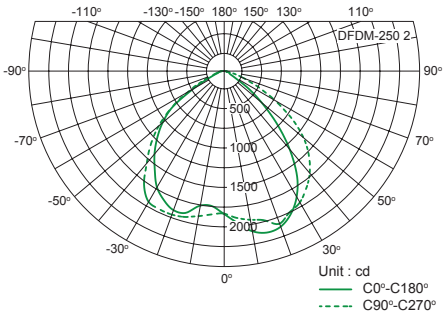

Complete photometrics, please contact us.

Dimensions (mm)

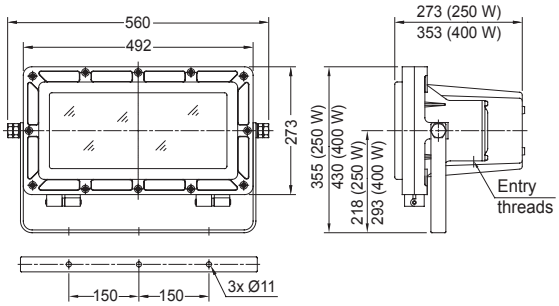

Wiring Diagram

Diagram-A

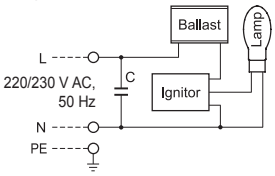

Diagram-B

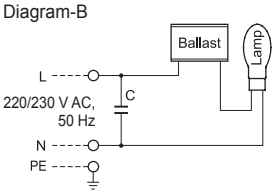

Ordering Requirements

Cat. No.	Lamp watt	Voltage	Lamp/ Ballast/ Ignitor	Temp. Class (for zone 1 & 2)		Max. Surface Temp.* (for zone 21 & 22)		Wiring diagram	Approx. weight (kg)
				Ta 40°C	Ta 55°C	Ta 40°C	Ta 55°C		
Mercury vapor lamp									
DFDM-2502 - □□	250 W	220 V AC, 50 Hz	HPL-N 250W / Q250.513 / –	T4	T3	T130°C	T160°C	Dia-B	24.5
DFDM-4002 - □□	400 W		HPL-N 400W / Q400.616 / –	T3	T3	T165°C	T180°C		27.2
DFDM-2503 - □□	250 W	230 V AC, 50 Hz	HPL-N 250W / Q250.528 / –	T4	T3	T130°C	T165°C	Dia-B	24.5
High pressure sodium lamp									
DFDS-2502 - □□	250 W	220 V AC, 50 Hz	SON-T 250W / NaHJ250.160 / Z400M	T4	T3	T130°C	T160°C	Dia-A	24.5
DFDS-4002 - □□	400 W		SON-T 400W / NaHJ400.162 / Z400M	T3	T3	T160°C	T180°C		27.2
DFDS-4003 - □□	400 W	230 V AC, 50 Hz	SON-T 400W / NaHJ400.006 / Z400M	T3	T3	T160°C	T180°C	Dia-A	27.2
Metal halide lamp									
DFDH-2502 - □□	250 W	220 V AC, 50 Hz	HPI-T PLUS 250W / Q250.513 / Z400M	T4	T3	T135°C	T175°C	Dia-A	24.5
DFDH-4002 - □□	400 W		HPI-T PLUS-400W / Q400.616 / Z400M	T3	T3	T165°C	T180°C	Dia-A	27.2
DFDH-2503 - □□	250 W	230 V AC, 50 Hz	HPI-T PLUS-250W / Q250.528 / Z400M	T4	T3	T135°C	T160°C	Dia-A	24.5

Remark * : *The maximum surface temperatures are specified for dust free condition. The dust layer which may cover around the lighting fixture will cause to higher surface temperature.*